HM-TX3840-15/G0/T1
Thermal TandemVu Camera





HIKMICRO HM-TX3840-15/G0/T1 Thermal TandemVu Camera is integrated by one bi-spectrum bullet camera offering perimeter protection and one optical PTZ camera smartly tracking moving targets to provide details. Thermal TandemVu camera is popularly applied in infrastructure such as airports, prisons, railway, city streets, campus, etc., in which smart tracking and perimeter protection are needed.

- 384×288 resolution thermal image, high sensitivity sensor, adjustable contrast
- Thermal image processing: Adaptive AGC, DDE, 3D DNR, NETD < 25 mK (@25 °C,F#=1.0)
- High quality imaging with 4MP optical PTZ and 40X optical zoom
- Multi-lens synergy within integrated design provide easy deployment
- Built-in speakers to provide audbile alarms and LED to provide whitelight supplement

▪ Specification

Illuminator	
Light Supplement	Up to 250m whitelight supplement
Smart Function	
VCA	4 VCA rule types (line crossing, intrusion, region entrance, and region exiting), up to 8 VCA rules in total.
System Function	
Click Linkage	One-Touch automatically calibration
Tracking Mode	Manual/Auto
Event Tracking	Intrusion Detection, Line Crossing Detection
Bullet Camera- Thermal Module	
Image Sensor	Vanadium Oxide Uncooled Focal Plane Arrays
Resolution	384 x 288
Pixel Pitch	12 μm
Spectral Range	8 μm to 14 μm
NETD (Noise Equivalent Temperature Difference)	< 25 mK (25°C, F1.0)
Focal Length	15.4 mm
IFOV	0.78 mrad
Field of View	18.1° × 13.9° (H × V)
Min. Focusing Distance	3 m
Aperture	F1.0
Digital Zoom	x2, x4, x8
Bullet Camera- Optical Module	
Image Sensor	1/1.8”CMOS
Resolution	2688 × 1520
Focal Length	8 mm
Field of View	39.4° × 21.96° (H × V)
Min. Illumination	Color: 0.005 Lux @ (F1.5, AGC ON)
Aperture	F1.5
Bullet Camera- General	
Main Stream	Thermal: 25 fps (1280 × 720, 704 × 576, 640 × 512, 320 × 240) Optical: 50 Hz: 25 fps (2688 × 1520, 1920 × 1080, 1280 × 720) 60Hz: 30 fps (2688 × 1520, 1920 × 1080, 1280 × 720)
Sub-stream	Thermal: 25 fps (704 × 576, 640 × 512, 320 × 240) Optical: 50 Hz: 25 fps (704 × 576, 352 × 288) 60 Hz: 30 fps (704 × 480, 352 × 240)
Video Compression	Main Stream: H.265/H.264 Sub-Stream: H.265/H.264/MJPEG
Audio Compression	G.711ulaw/G.711alaw/G.726/MP2L2/AAC
Alarm Input	2-ch inputs (0-5 VDC)
Alarm Output	2-ch relay outputs, alarm response actions configurable

Audio Input	1-ch, Line input: 2 - 2.4 V [p-p], output impedance: 1 KΩ ± 10%
Audio Output	1-ch, Linear Level; Impedance: 600 Ω
Communication Interface	1, RJ45 10 M/100 M Self-adaptive Ethernet interface. 1, RS-485 interface 1, BNC 1.0 V [p-p]/75 Ω video output
Optical Speed Dome	
Image Sensor	1/1.8'' progressive scan CMOS
Resolution	2688 x 1520
Min. Illumination	Color: 0.0003 Lux @(F1.3, AGC ON), 0 Lux with light on
Focal Length	6 - 240mm, 40 × optical zoom
Field of View	59°(H)*34.16°(V)-1.77°(H)*1.0°(V)
Digital Zoom	×2, ×4, ×8, ×16
Aperture Range	F1.3-F4.6
Focus Mode	Auto/Semi-auto/Manual
WDR	120 dB
Optical Defog	Yes
Image Enhancement	3D DNR, EIS, HLC/BLC
Pan Speed	configurable from 1° to 160°/s
Tilt Speed	configurable from 1°/s to 90°/s
Main Stream	60 Hz: 30 fps (2688 × 1520, 1920 × 1080, 1280 × 720) 50 Hz: 25 fps (2688 × 1520, 1920 × 1080, 1280 × 720)
Sub-Stream	60 Hz: 30 fps (704 × 480, 352 × 240, 176 × 120) 50 Hz: 25 fps (704 × 576, 352 × 288, 176 × 144)
Video Compression	Main Stream: H.265+/H.265/H.264+/H.264 Sub-Stream: H.265/H.264/MJPEG
Network	
Protocols	IPv4/IPv6, HTTP, HTTPS, 802.1x, QoS, FTP, SMTP, UPnP, SNMP, DNS, DDNS, NTP, RTSP, RTCP, RTP, TCP, UDP, IGMP, ICMP, DHCP, PPPoE, SRTP
Network Storage	MicroSD/SDHC/SDXC card (up to 256 G) local storage, and NAS (NFS, SMB/CIFS), auto network replenishment (ANR)
API	ISAPI, HIKVISION SDK, and third-party management platform, Open Network Video Interface,ONVIF (Profile S, Profile G)
Simultaneous Live View	Up to 20 channels
User/Host level	Up to 32 users, 3 levels: Administrator, Operator, User
Security	User authentication (ID and Password), MAC address binding, HTTPS encryption, IEEE 802.1x(EAP-MD5, EAP-TLS), access control, IP address filtering
Client	iVMS-4200, Hik-Connect
Web Browser	Live view (plug-in allowed) : Internet Explorer 11 Live view (plug-in free) : Chrome 57.0 +, Firefox 52.0 + Local service : Chrome 57.0 +, Firefox 52.0 +
General	
Power Supply	DC36V,AC24V,PoE++
Power Consumption	Max. 90W
Working Temperature/Humidity	-40 °C to +70 °C (- 40 °F to 149 °F), Humidity: 90% or less

Protection Level	IP67 Standard; TVS 6000V Lightning Protection, Surge Protection and Voltage Transient Protection
Dimensions	458.7mm x 266.6mm x 290mm
Weight	13.5kg
Detection Range Table	
VCA Range for Humans	150m
VCA Range for Vehicles	450m

▪ Range Table

VCA Range (Vehicles: 1.4 × 4.0 m)	VCA Range (Humans: 1.8 × 0.5 m)
450m	150m

▪ DORI

* The table is only for reference and the performance may vary according to different environment.
* The optimal human detection, recognition, and identification distances are calculated according to Johnson's Criteria.

Detection Range: In order to distinguish an object from the background, the object must be covered by 1.5 or more pixels.
Recognition Range: In order to classify the object (animal, human, vehicle, etc.), the object must be covered by 6 or more pixels.
Identification Range: In order to identify the object and describe it in details, the object must be covered by 12 or more pixels.

Detection Range (Vehicles: 1.4 × 4.0 m)	Detection Range (Humans: 1.8 × 0.5 m)	Recognition Range (Vehicles: 1.4 × 4.0 m)	Recognition Range (Humans: 1.8 × 0.5 m)	Identification Range (Vehicles: 1.4 × 4.0 m)	Identification Range (Humans: 1.8 × 0.5 m)
1917m	625m	479m	156m	240m	78m

▪ Available Model

HM-TX3840-15/G0/T1

▪ Dimension

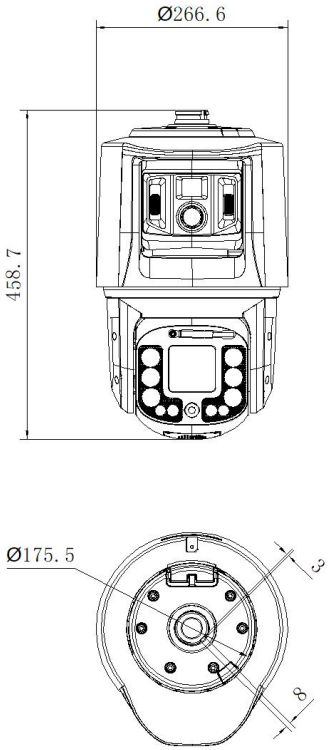

▪ Accessory

▪ Optional

DS-1668ZJ(20)-P	DS-1668ZJ-P	DS-1603ZJ-Pole-P	DS-1603ZJ-P
			

See Far, Go Further

www.hikvision.com
support@hikvision.com

© Hangzhou Hikvision Digital Technology Co., Ltd. Unless otherwise agreed, Hikvision makes no warranties, express or implied. We reserve the right to introduce modifications without notice.

HIKVISION®