DS-2TD6267-100C4L/WY

Anti-corrosion Thermal & Optical Bi-spectrum Network Positioning System



Hikvision DS-2TD6267-100C4L/WY Anti-corrosion Thermal Optical Bi-spectrum Network Positioning System is applied to perimeter protection and fire-prevention purposes in scenes such as port, dock, island, aquafarm. The coating technology can meet the use requirements in anti-corrosion environment.

- Perimeter protection function, based on intelligent algorithm: line crossing, intrusion, region entrance & exit
- Temperature exception alarm for fire prevention
- Fire detection smoke detection algorithm
- 640 × 512 resolution 17 μm, VOx UFPA, NETD ≤ 35 mK (25 °C, F# = 1.0)
- Image processing technology: Liner, histogram, and self-adaptive thermal AGC mode, DDE, 3D DNR
- NEMA-4X Standard
- thermal channel supports EIS, conflicted with intelligent function

▪ Specification

Thermal Module	
Image Sensor	VOx Uncooled Focal Plane Arrays
Resolution	640 × 512
Pixel Interval	17 μm
Response Waveband	8 μm to 14 μm
NETD	Less than 35 mK (@25 ℃,F#=1.0)
Focal Length	100 mm
Focus Mode	Semi-auto & Manual
IFOV	0.17 mrad
Aperture	F1.2
Field of View	6.23° × 4.98°(H × V)
Min. Focusing Distance	10 m
Digital Zoom	×1 , ×2, ×4, ×8
Optical Module	
Image Sensor	1/1.8" Progressive Scan CMOS
Resolution	2688 × 1520, 4 MP
Min. Illumination	Color: 0.0005 Lux @ (F1.5, AGC ON), B/W: 0.0001 Lux @ (F1.5, AGC ON)
Field of View	Wide: 0.92° × 0.52°; Tele: 48.26° × 28.43°
Focal Length	6 to 336 mm 56x
Aperture (Range)	F1.3-F4.0
Focus Mode	Semi-auto/Manual
Shutter Speed	1.1 s to 1/30,000 s
WDR	120 dB
Optical Defog	Yes
Image Effect	
Picture in Picture	Display partial image of thermal channel on the full screen of optical channel
Target Coloration	Yes. Supported in white hot and black hot mode.
PTZ	
Movement Range	Pan: 360° Continuous Rotate; Tilt: From -90° to + 40° (auto flip)
Pan Speed	Configurable, From 0.01°/s to 110°/s
Tilt Speed	Configurable, From 0.01°/s to 50°/s
Proportional Zoom	Yes
Presets	300 in total
Patrol Scan	8; Up to 32 Presets Per Patrol
Pattern Scan	4; More Than 10 Minutes Per Pattern
Power Off Memory	Yes
Park	Preset/Pattern Scan/Patrol Scan/Auto Scan/Tilt Scan/Random Scan/Frame Scan/Panorama Scan
PT Status	Turn On/Turn Off
Scheduled Task	Preset/Pattern Scan/Patrol Scan/Auto Scan/Tilt Scan/Random Scan/Frame Scan/Panorama Scan/Doom Reboot/Doom Adjust/Aux Output
Illuminator	
IR Distance	Up to 800 m
IR Intensity and Angle	Automatically adjusted

Smart Function	
VCA	Support 4 VCA rule types (Line Crossing, Intrusion, Region Entrance, and Region Exiting), up to 10 scenes and 8 VCA rules for each scene
Temperature Measurement	Support 3 temperature measurement rule types, 273 presets as scene, 21 rules of each scene (10 points, 10 areas, and 1 line)
Temperature Range	-20 °C to 150 °C (-4 °F to 302 °F)
Temperature Accuracy	± 8 °C (±14.4 °F)
Fire Detection	Dynamic fire point detection, up to 10 fire points detectable.
Video and Audio	
Main Stream	Optical channel 50 Hz: 25 fps (2688 × 1520 , 1920 × 1080, 1280 × 960, 1280 × 720) 60 Hz: 30 fps (2688 × 1520 , 1920 × 1080, 1280 × 960, 1280 × 720) Thermal channel 50 fps (1920 × 1080, 1280 × 960, 1280 × 720, 704 x 576, 640 x 512, 384 x 288)
Sub-stream	Optical channel 50 Hz: 25fps (704 × 576, 352 × 288) 60 Hz: 30 fps (704 × 576, 352 × 288) Thermal channel 50 fps (704 × 576, 640 × 512, 384 × 288)
Video Compression	Main stream: H.265+/H.265/H.264+/ H.264 Sub-stream: H.265/H.264/MJPEG
Audio Compression	G .711u/G.711a/G.722.1/MP2L2/G.726/PCM
Network	
Protocols	IPv4/IPv6, HTTP, HTTPS, 802.1x, Qos, FTP, SMTP, UPnP, SNMP, DNS, DDNS, NTP, RTSP, RTCP, RTP, TCP, UDP, IGMP, ICMP, DHCP, PPPoE, SRTP
Network Storage	MicroSD/SDHC/SDXC card (up to 256 G) local storage, and NAS (NFS, SMB/CIFS), auto network replenishment (ANR)
API	ISAPI, HIKVISION SDK, third-party management platform, ONVIF (Profile S, Profile G, Profile T)
Simultaneous Live View	Up to 20 channels
User/Host level	Up to 32 users, 3 levels: Administrator, Operator, User
Security	User authentication (ID and password), MAC address binding, HTTPS encryption, IEEE 802.1x access control, IP address filtering
Client	iVMS-4200, Hik-Connect
Web Browser	Live view (plug-in allowed) : Internet Explorer 11 Live view (plug-in free) : Chrome 57.0 +, Firefox 52.0 + Local service : Chrome 57.0+, Firefox 52.0 +
Interface	
Alarm Input	7-ch inputs (0-5 VDC)
Alarm Output	2-ch relay outputs, alarm response actions configurable
Alarm Action	Preset/Patrol Scan/Pattern Scan/SD Card Record/Relay Output/Smart capture/FTP upload/Email linkage
Audio Input	1, 3.5 mm Mic in/Line in interface. Line input: 2 - 2.4 V [p-p], output impedance: 1 KΩ ± 10%
Audio Output	Linear Level; Impedance: 600 Ω

Communication Interface	1, RJ45 10 M/100 M Self-adaptive Ethernet interface. 1, RS-485 interface
Analog Video Output	1.0 V [p-p]/75 Ω, BNC for thermal channel
General	
Web Client Language	32 languages English, Russian, Estonian, Bulgarian, Hungarian, Greek, German, Italian, Czech, Slovak, French, Polish, Dutch, Portuguese, Spanish, Romanian, Danish, Swedish, Norwegian, Finnish, Croatian, Slovenian, Serbian, Turkish, Korean, Traditional Chinese, Thai, Vietnamese, Japanese, Latvian, Lithuanian, Portuguese (Brazil)
Power	36VDC ± 20%, 48VDC ± 20%, two-core terminal block
Power Consumption	5 A, max. 120 W
Work Temperature/Humidity	From -40°C to 65°C (-40°F to 149°F); Humidity: 95% or Less
Wiper	Yes
Protection Level	IP66 Standard; TVS 6000V Lightning Protection, Surge Protection and Voltage Transient Protection
Dimension	486.1 mm × 337.6 mm × 450.3 mm (19.14 " × 13.29" × 17.73 ")
Weight	Approx. 20 kg (44.092 lb)
Detection Range Table	
VCA Range for Humans	700 m
VCA Range for Vehicles	2100 m

▪ Range Table

VCA Range (Vehicles: 1.4 × 4.0 m)	VCA Range (Humans: 1.8 × 0.5 m)	Temperature Measurement (Object: 2 × 2 m)	Temperature Measurement (Object: 1 × 1 m)	Fire Detection (Object: 2 × 2 m)	Fire Detection (Object: 1 × 1 m)
2100 m	700 m	2340 m	1180 m	5880 m	2940 m

▪ DORI

* The table is only for reference and the performance may vary according to different environment.
* The optimal human detection, recognition, and identification distances are calculated according to Johnson's Criteria.

Detection Range: In order to distinguish an object from the background, the object must be covered by 1.5 or more pixels.
Recognition Range: In order to classify the object (animal, human, vehicle, etc.), the object must be covered by 6 or more pixels.
Identification Range: In order to identify the object and describe it in details, the object must be covered by 12 or more pixels.

Detection Range (Vehicles: 1.4 × 4.0 m)	Detection Range (Humans: 1.8 × 0.5 m)	Recognition Range (Vehicles: 1.4 × 4.0 m)	Recognition Range (Humans: 1.8 × 0.5 m)	Identification Range (Vehicles: 1.4 × 4.0 m)	Identification Range (Humans: 1.8 × 0.5 m)
9020 m	2941 m	2255 m	735 m	1127 m	368 m

▪ Available Model

DS-2TD6267-100C4L/WY

▪ Dimension

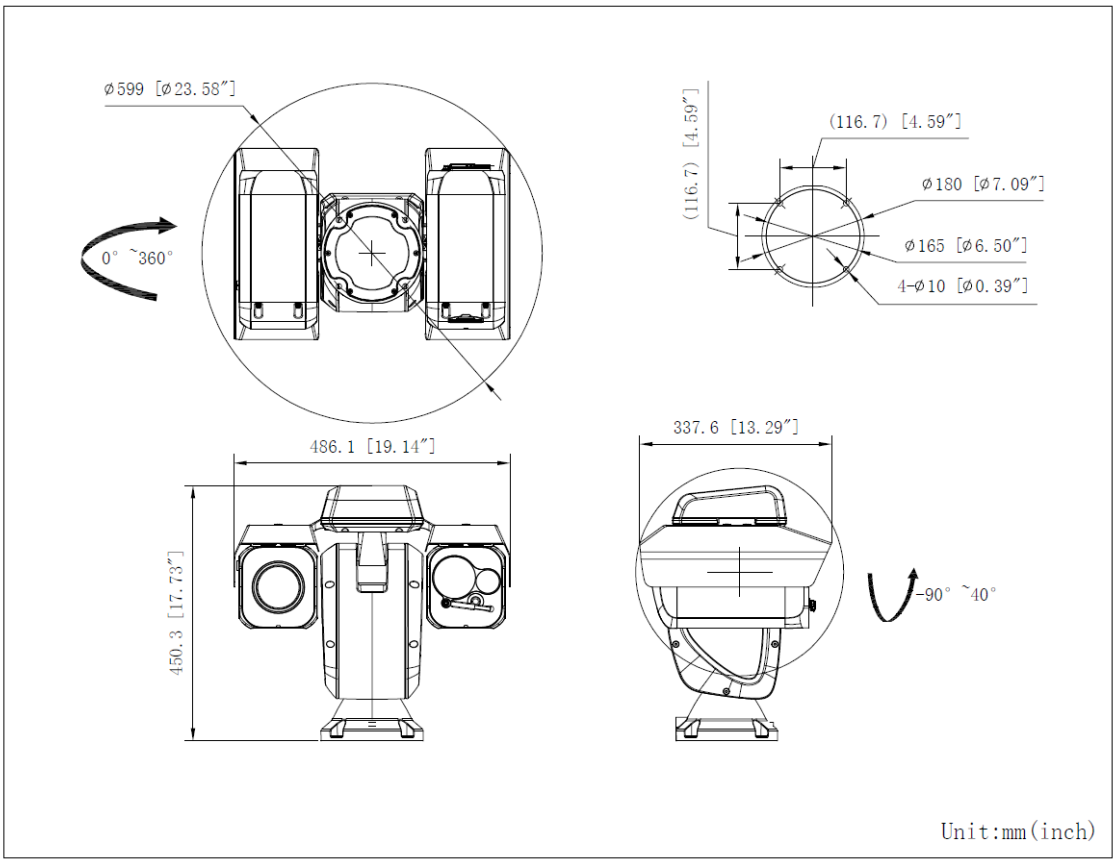
ø599 [ø23.58″]
0° ~360°
(116.7) [4.59″]
(116.7) [4.59″]
ø180 [ø7.09″]
ø165 [ø6.50″]
4-ø10 [ø0.39″]
486.1 [19.14″]
450.3 [17.73″]
337.6 [13.29″]
-90° ~40°
Unit:mm(inch)

See Far, Go Further

www.hikvision.com
support@hikvision.com

© Hangzhou Hikvision Digital Technology Co., Ltd. Unless otherwise agreed, Hikvision makes no warranties, express or implied. We reserve the right to introduce modifications without notice.

HIKVISION®