DS-2SF8C425MXG1-ELY/14

TandemVu 8C Series 4 MP 25X DarkFighter Network Speed Dome





Hikvision has been dedicated to develop products with security since established.
Hikvision always follows security by design principle and has adopted many methods of security technologies into our product development lifecycle, including terminal security, data security, application security, network security, and privacy protection. In the meantime, the security technologies used by Hikvision are all in compliance with local applicable laws and safety regulations. These security measures could enhance product's cyber security defense capability and protect your devices as well as your data from malicious cyber attacks.

- Captures a large area and great details at the same time
- High quality imaging with 4 MP resolution for both bullet channel and PTZ channel
- 24/7 colorful imaging and excellent low-light performance with DarkFighter 2.0 technology
- Bullet channel tilt adjustable from 7° to 17°
- Secures an expansive area with 25 × optical zoom and 16 × digital zoom
- Expansive night view with up to 30 m white light distance and 300 m IR distance
- Supports deep learning functions
- Water and dust resistant (IP67) and vandal resistant (IK10) excluding glass window
- Audio visual alarm: The white flashing light and audible warning can be triggered by certain events

▪ Specification

Camera	
Image Sensor	[Bullet channel] 1/1.8" Progressive Scan CMOS, [PTZ channel] 1/1.8" Progressive Scan CMOS
Min. Illumination	[Bullet channel] Color: 0.0005 Lux @ (F1.0, AGC ON), B/W: 0.0001 Lux @ (F1.0, AGC ON), 0 Lux with light, [PTZ channel] Color: 0.0005 Lux @ (F1.5, AGC ON), B/W: 0.0001 Lux @ (F1.5, AGC ON), 0 lux with IR
Shutter Speed	1 s to 1/30000 s
Slow Shutter	Yes
Day & Night	[Bullet channel] Day,Night,Schedule,Auto, [PTZ channel] Day,Night,Schedule,Auto
Zoom	[PTZ channel] 25 × optical, 16 × digital
Max. Resolution	[Bullet channel] 2688 × 1520, [PTZ channel] 2688 × 1520
Lens	
Zoom Speed	[Bullet channel] No, [PTZ channel] approx. 4.8 s
Focus	Auto,semi-auto,manual
Focal Length	[Bullet channel] 4 mm, [PTZ channel] 5.9 to 147.5 mm
FOV	[Bullet channel] horizontal field of view: 89° ± 5°, vertical field of view: 45° ± 5°, diagonal field of view: 107° ± 5°, [PTZ channel] horizontal field of view: 58.5° to 3.1°, vertical field of view: 34° to 1.7°, diagonal field of view: 68.5° to 3.5°
Aperture	[Bullet channel] F1.0, [PTZ channel] F1.5
Illuminator	
Supplement Light Range	[Bullet channel] white light: up to 30 m, [PTZ channel] IR: up to 300 m
Smart Supplement Light	Yes
PTZ	
Movement Range (Pan)	[PTZ channel] 0° to 360°
Movement Range (Tilt)	[Bullet channel] 7° to 17°, [PTZ channel] -20° to 90°
Pan Speed	[PTZ channel] pan speed: configurable from 0.1° to 160°/s, preset speed: 240°/s
Tilt Speed	[Bullet channel] tilt speed configurable,[PTZ channel] tilt speed: configurable from 0.1° to 120°/s, preset speed 200°/s
Proportional Pan	[Bullet channel] No, [PTZ channel] Yes
Presets	300
Patrol Scan	8 patrols, up to 32 presets for each patrol
Pattern Scan	4 pattern scans, record time over 10 minutes for each scan
Power-off Memory	Yes
Park Action	Preset,pattern scan,patrol scan,auto scan,tilt scan,random scan,frame scan,panorama scan
3D Positioning	Yes
PTZ Status Display	Yes
Preset Freezing	Yes
Scheduled Task	Preset,pattern scan,patrol scan,auto scan,tilt scan,random scan,frame scan,panorama scan,dome reboot,dome adjust,aux output

Video	
Main Stream	[Bullet channel] 50 Hz: 25 fps (2688 × 1520, 2560 × 1440), 60 Hz: 30fps (2688 × 1520, 2560 × 1440) [PTZ channel] 50 Hz: 50 fps (2688 × 1520, 2560 × 1440), 100 fps (1920 × 1080, 1280 × 960, 1280 × 720), 60 Hz: 60 fps (2688 × 1520, 2560 × 1440), 120 fps (1920 × 1080, 1280 × 960, 1280 × 720) *High frame rate is supported under monitoring mode only.
Sub-Stream	[Bullet channel] 50 Hz: 25 fps (704 × 576, 640 × 480, 352 × 288), 60 Hz: 30 fps (704 × 480, 640 × 480, 352 × 240),[PTZ channel] 50 Hz: 25 fps (704 × 576, 640 × 480, 352 × 288), 60 Hz: 30 fps (704 × 480, 640 × 480, 352 × 240)
Third Stream	[Bullet channel] 50 Hz: 25 fps (1920 × 1080, 1280 × 960, 1280 × 720, 704 × 576, 640 × 480, 352 × 288), 60 Hz: 30 fps (1920 × 1080, 1280 × 960, 1280 × 720, 704 × 480, 640 × 480, 352 × 240),[PTZ channel] 50 Hz: 25 fps (1920 × 1080, 1280 × 960, 1280 × 720, 704 × 576, 640 × 480, 352 × 288), 60 Hz: 30 fps (1920 × 1080, 1280 × 960, 1280 × 720, 704 × 480, 640 × 480, 352 × 240)
Video Compression	Main stream: H.265+/H.265/H.264+/H.264, Sub-stream: H.265/H.264/MJPEG, Third stream: H.265/H.264/MJPEG
Video Bit Rate	32 Kbps to 16 Mbps
H.264 Type	Baseline profile,Main profile,High profile
H.265 Type	Main profile
Scalable Video Coding (SVC)	H.264 and H.265 encoding
Region of Interest (ROI)	8 fixed regions for each stream
Audio	
Audio Compression	G.711,G.722.1,G.726,MP2L2,PCM,AAC-LC,MP3
Audio Bit Rate	32 to 192 Kbps (MP2L2),16 to 64Kbps (AAC-LC),64 Kbps (G.711),16 Kbps (G.726),16 Kbps (G.722.1),8-48 Kbps (PCM)
Audio Sampling Rate	8 kHz,16 kHz,32 kHz,48 kHz
Environment Noise Filtering	Yes
Network	
API	ONVIF (Profile S, Profile G, Profile T, Profile M),ISUP,ISAPI,SDK,OTAP
Security	Password protection,complicated password,HTTPS encryption,IP address filter,802.1X authentication (EAP-TLS, EAP-LEAP, EAP-MD5),watermark,host authentication (MAC address),TPM 2.0 (FIPS 140-2 level 2)
Network Storage	NAS (NFS, SMB/CIFS),auto network replenishment (ANR)
Protocols	IPv4/IPv6,HTTP,HTTPS,802.1X,QoS,SMTP,UPnP,SNMP,DNS,DDNS,NTP,RTSP,RTCP,RTP,TCP/IP,UDP,IGMP,ICMP,DHCP,PPPoE,Bonjour,FTP
Simultaneous Live View	Up to 20 channels
User/Host	Up to 32 users. 3 user levels: administrator, operator, and user
Client	iVMS-4200,HikCentral Pro,Hik-Connect
Web Browser	IE8+ Plug-in free live view: Chrome 57.0+, Firefox 52.0+, Safari 11+ Local service: Chrome 41.0+, Firefox 30.0+

Image	
Wide Dynamic Range (WDR)	[Bullet channel] 120 dB, [PTZ channel] 150 dB
Day/Night Switch	Day,night,auto,schedule
Image Enhancement	HLC,3D DNR
Defog	Digital defog
Image Stabilization	EIS (Built-in gyroscope to improve EIS performance)
Regional Exposure	Yes
Regional Focus	[Bullet channel] No, [PTZ channel] Yes
Image Settings	Saturation, brightness, contrast, sharpness, gain, and white balance adjustable by client software or web browser
Image Parameters Switch	Yes
Privacy Mask	[Bullet channel] No, [PTZ channel] 24 programmable polygon privacy masks; mask color or mosaic configurable
SNR	≥ 52 dB
Supplement Detection	
Satellite Positioning	No
Gyroscope	Yes
Compass	No
Interface	
On-board Storage	Built-in memory card slot, support microSD/microSDHC/microSDXC card, up to 1 TB .
Built-in Speaker	1 built-in speaker
Ethernet Interface	1 RJ45 100M self-adaptive Ethernet port
Alarm	7 input(s), 2 output(s)
Audio	1 input (line in), max. input amplitude: 2-2.4 vpp, input impedance: 1 KΩ ± 10%, 1 output (line out), line level, output impedance: 600 Ω
RS-485	1 RS-485 (Half duplex, HIKVISION, Pelco-P, Pelco-D, self-adaptive)
Reset	Yes
Event	
Basic Event	[PTZ channel] video tampering alarm,[PTZ channel & bullet channel] alarm input and output, exception
Smart Event	[PTZ channel & bullet channel] audio exception detection,[PTZ channel] line crossing detection, intrusion detection, region entrance detection, region exiting detection,[Bullet channel] line crossing detection, intrusion detection, region entrance detection, region exiting detection
Linkage	[Bullet channel] Upload to FTP/NAS/memory card, notify surveillance center, send email, trigger alarm output, trigger recording, audible warning, white light flashing,[PTZ channel] Upload to FTP/NAS/memory card, notify surveillance center, send email, trigger alarm output, trigger recording, audible warning, white light flashing, and PTZ actions (such as preset, patrol scan, pattern scan)
Deep Learning Function	
Perimeter Protection	Line crossing detection, region entrance detection, intrusion detection, region exiting detection
Face Capture	Detects up to 30 faces simultaneously, Uploads face with background and closed-up face pictures

Face Comparison	Up to 10 face libraries. 30000 faces for each library. 150000 faces in total, Recognizes face identity via face modeling, grading and comparing to those in face library, Supports face library encryption
Road Traffic and Vehicle Detection	Smart Function: Support license plate recognition of vehicles and motorcycles (only in checkpoint scenario) Support vehicle attribute detection, including vehicle type, color, brand, driving direction, etc. Support vehicle and non-vehicle counting Blocklist and allowlist: up to 10,000 records LPR Countries/Regions: 4 areas (Europe, Middle East, Asia-Pacific, Africa) and more than 124 countries/regions Accuracy (Under recommended installation and lighting conditions): License plate recognition rate ≥98% Capture rate ≥99% Driving direction accuracy rate ≥98% Vehicle Capture Speed: Front installation in checkpoint scenario: up to 120 km/h Side installation: up to 80 km/h Capture Mode: License Plate and Vehicle Mode, Vehicle Priority Mode
Multi-Target-Type Detection	Supports simultaneous detection and capture of human body, face and vehicle, Gets 7 face features, 14 human body features and 8 vehicle features
Linkage and Tracking	
Smart Tracking	Manual tracking, auto-tracking 3.0
Smart Linkage	Manual tracking, auto tracking, tracking takeover, linked tracking capture
Object Tracking	Support person arming. When the device detects the armed face or human body in the monitoring scene, it triggers alarms, and tracks and captures the target. During the tracking, the target location and other related information are uploaded.Support vehicle arming. When the device detects the armed vehicles in the monitoring scene, it triggers alarms, and tracks and captures the target. During the tracking, the target location and other related information are uploaded.
General	
Power	36V, 2.5 A, PoE(802.3 bt), 42.5 to 57 V, 1.76 A
General Function	mirror,password protection
Operating Condition	-40 °C to 70 °C (-40 °F to 158 °F). Humidity 95% or less (non-condensing),For speaker: -30 °C to 55°C (-22°F to 131°F)
Wiper	Yes
Demist	Yes
Material	ADC12
Dimension	Ø290 mm × 453.2 mm (Ø11.42" × 17.84")
Weight	Approx. 11.5 kg (25.35 lb.)
Language	33 languages: English, Russian, Estonian, Bulgarian, Hungarian, Greek, German, Italian, Czech, Slovak, French, Polish, Dutch, Portuguese, Spanish, Romanian, Danish, Swedish, Norwegian, Finnish, Croatian, Slovenian, Serbian, Turkish, Korean, Traditional Chinese, Thai, Vietnamese, Japanese, Latvian, Lithuanian, Portuguese (Brazil), Ukrainian

Approval	
EMC	CE-EMC (EN 55032: 2015, EN 61000-3-2: 2019, EN 61000-3-3: 2013 + A1: 2019, EN 50130-4: 2011 + A1: 2014),RCM (AS/NZS CISPR 32: 2015),IC (ICES-003: Issue 7)
Safety	CB (IEC 62368-1: 2014 + A11),CE-LVD (EN 62368-1: 2014/A11: 2017)
Environment	CE-RoHS (2011/65/EU),WEEE (2012/19/EU),Reach (Regulation (EC) No 1907/2006)
Protection	IP67 (IEC 60529-2013),TVS 6000 V lightning protection, surge protection and voltage transient protection,IK10 (IEC 62262:2002, excluding glass window)
Anti-Corrosion Protection	NEMA 4X (NEMA 250-2018)

▪ DORI

The DORI (detect, observe, recognize, identify) distance gives the general idea of the camera ability to distinguish persons or objects within its field of view. It is calculated based on the camera sensor specification and the criteria given by EN 62676-4: 2015.

DORI	Detect	Observe	Recognize	Identify
Definition	25 px/m	63 px/m	125 px/m	250 px/m
[Bullet channel] Distance	77.0m	30.5m	15.4m	7.7m
[PTZ channel] Distance (Tele)	1855.2m	736.2m	371m	185.5m

▪ Dimension

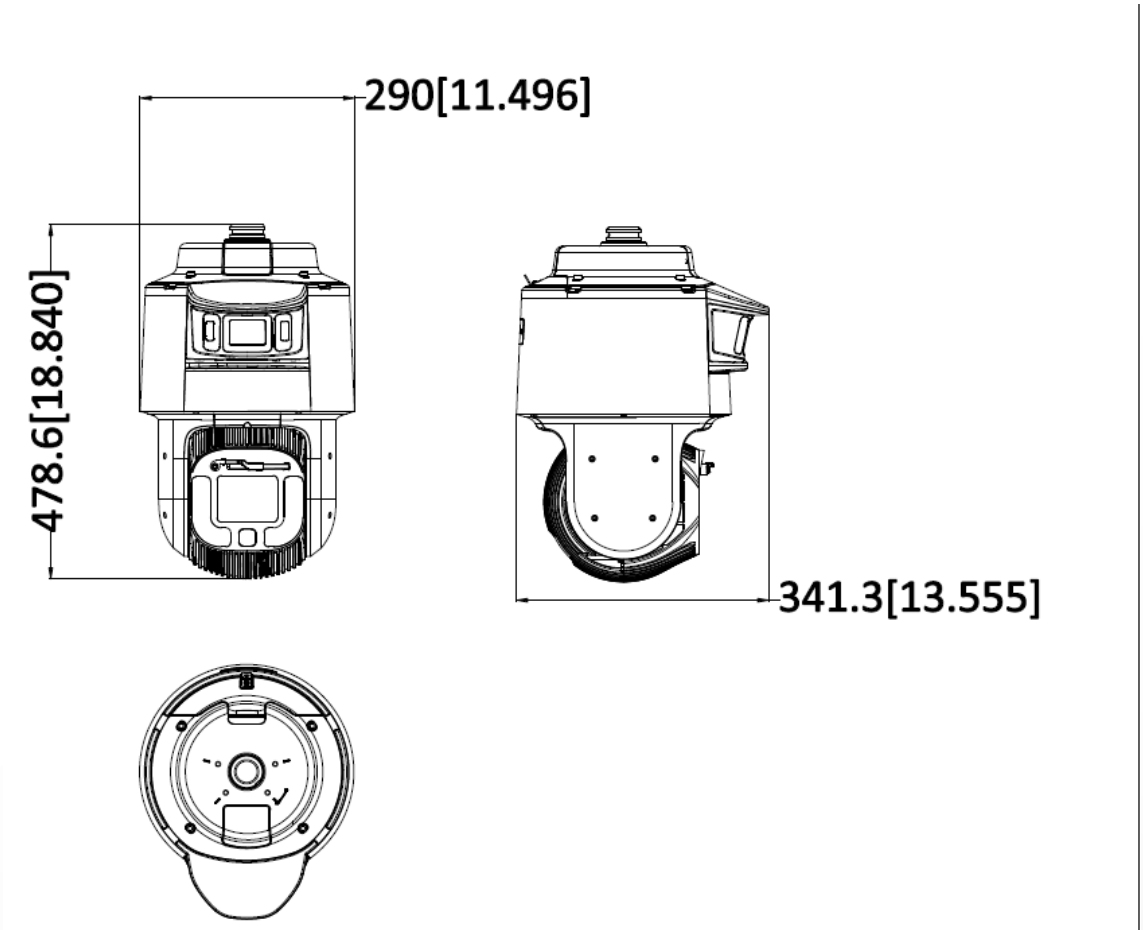

▪ Accessory

▪ Optional

DS-4614ZJ-PAAC	DS-4604ZJ-PAAC
	

See Far, Go Further

www.hikvision.com
support@hikvision.com

© Hangzhou Hikvision Digital Technology Co., Ltd. Unless otherwise agreed, Hikvision makes no warranties, express or implied. We reserve the right to introduce modifications without notice.

HIKVISION®