HM-TD3028T-3/Q(B)
Thermography Cube Camera



Hikmicro HM-TD3028T-3/Q(B) Thermographic Cube Camera is able to measure object's temperature at a high accuracy in real time. It is applied to fire prevention purpose in electric system, industrial automation and so on. The pre-alarm system helps you discover unexpected events immediately and protects your property.

- 256 × 192 resolution, 12 µm, VOx UFPA, NETD ≤ 40mK (25°C, F1.0)
- Support white light supplement
- Temperature exception alarm for fire prevention, -20 °C to 550 °C (-4 °F to 1022 °F), Max. (± 2 °C, ± 2%)
- Built-in buzzer for audible warning when anomaly temperature detected
- Support Modbus TCP for 3rd integration
- Image processing technology: linear, histogram, self-adaptive thermal AGC mode, DDE, 3D DNR
- High quality detector with 10 years guarantee

▪ Specification

Thermal Module	
Image Sensor	Vanadium Oxide Uncooled Focal Plane Arrays
Resolution	256 × 192
Pixel Pitch	12 μm
Spectral Range	8 μm to 14 μm
NETD	≤40 mK (25°C, F1.0)
Focal Length	3.6 mm
IFOV	3.33 mrad
Field of View	50° × 37.2° (H × V)
Min. Focusing Distance	0.3 m
Aperture	F1.0
Digital Zoom	×2, ×4
Optical Module	
Image Sensor	1/5" Progressive Scan CMOS
Resolution	2688 × 1520
Min. Illumination	0.06 Lux @ (2.2, AGC ON) , 0 Lux with IR
Shutter Speed	1 s to 1/100,000 s
Focal Length	1.4mm
Field of View	96.9° × 77.2° (H × V)
Aperture (Range)	F2.2
WDR	120 dB
Image Effect	
Bi-spectrum Image Fusion	Display the details of optical channel on thermal channel
Picture in Picture	Display partial image of thermal channel on the full screen of optical channe
Target Coloration	Yes. Supported in white hot and black hot mode.
Audible and Visual Alarm	
White Light Range	Up to 3.5 m
Visual Alarm	Yes. White light alarm
Audio alarm	Buzzer triggered when alarm happens
Smart Function	
Temperature Measurement	3 temperature measurement rule types (point, area, line), 21 rules in total
Temperature Range	-20 °C to 550 °C (-4 °F to 1022 °F)
Temperature Accuracy	Max (± 2 °C, ±2 %)
Video and Audio	
Main Stream	Thermal: 25 fps (1280 × 960, 1280 × 720, 704 × 576, 640 × 512) Optical: 50 Hz: 25 fps (2688 × 1520, 2560 × 1440,1920 × 1080, 1280 × 960, 1280 × 720) 60 Hz: 30 fps (2688 × 1520, 2560 × 1440,1920 × 1080, 1280 × 960, 1280 × 720)
Sub-stream	Thermal: 25 fps (704 × 576, 640 × 512, 320 × 240) Optical: 50 Hz: 25 fps (704 × 576, 352 × 288) 60 Hz: 30 fps (704 × 480, 352 × 240)

Video Compression	Main Stream: H.265/H.264 Sub-Stream: H.265/H.264/MJPEG
Video and Image	
Color Palettes	17 types (White hot, Black hot, Fusion 1, Rainbow, Fusion 2, Ironbow 1, Ironbow 2, Sepia, Color 1, Color 2, Icefire, Rain, Red hot, Green hot, Dark blue, Winter, Summer)
Network	
Protocols	IPv4/IPv6,HTTP,HTTPS,802.1x,Qos,FTP,SMTP,UPnP,SNMP,DNS,DDNS,NTP,RTSP,RTCP,RTP,TCP,UDP,IGMP,ICMP,DHCP,PPPoE,Bonjour,SFTP,SRTP
Network Storage	NAS (NFS, SMB/CIFS), Auto Network Replenishment (ANR)
API	ISAPI, ISUP, HIKVISION SDK, and third-party management platform, Open Network Video Interface (Profile S, Profile G, Profile T), OTAP
Simultaneous Live View	Up to 20 channels
User/Host level	Up to 32 users, 3 levels: Administrator, Operator, User
Security	User authentication (ID and Password), MAC address binding, HTTPS encryption, IEEE 802.1x(EAP-MD5, EAP-TLS), access control, IP address filtering
Client	iVMS-4200, Hik-Connect
Web Browser	Live view (plug-in allowed) : Internet Explorer 11 Live view (plug-in free) : Chrome 57.0 +, Firefox 52.0 + Local service : Chrome 57.0+, Firefox 52.0 +
Interface	
Alarm Output	2, alarm output (alarm response actions configurable)
Alarm Action	Relay output/Smart capture/FTP upload/Email linkage
Communication Interface	1, RJ45 10 M/100 M/1000M Self-adaptive Ethernet interface. 1, RS-485 interface (half duplex)
General	
Web Client Language	32 languages English, Russian, Estonian, Bulgarian, Hungarian, Greek, German, Italian, Czech, Slovak, French, Polish, Dutch, Portuguese, Spanish, Romanian, Danish, Swedish, Norwegian, Finnish, Croatian, Slovenian, Serbian, Turkish, Korean, Traditional Chinese, Thai, Vietnamese, Japanese, Latvian, Lithuanian, Portuguese (Brazil)
Power Supply	12 VDC, Max. 5 W PoE (802.3af, class 2)
Working Temperature/Humidity	Accurate Temperature Measurement: -20 °C~60 °C, < 90% RH Normal Operation: -40 °C~70 °C, < 90% RH
Protection Level	IP67 Standard
Dimensions	56 mm × 38.9 mm × 111.2 mm (2.20" × 1.53" × 4.38")
Weight	Approx. 335 g (0.74 lb)
Approval	
EMC	CE-EMC (EN 55032: 2015, EN 61000-3-2:2019, EN 61000-3-3: 2013+A1:2019, EN50130-4: 2011+A1: 2014); RCM (AS/NZS CISPR 32: 2015); IC (ICES-003: Issue 7) KC (KSC 9832:2023; KSC 9835:2019)
Safety	CB: IEC 62368-1: 2014+A11; CE-LVD: EN 62368-1: 2014/A11: 2017; LOA: SANS/IEC 60950-1

Environment	CE-RoHS：2011/65/EU, WEEE: 2012/19/EU, Reach：Regulation(EC) No 1907/2006
Protection	IP67:IEC 60529-2013

▪ Range Table

**The table is only for reference and the performance may vary according to different environment.*

Temperature Measurement (Object: 0.2 × 0. 2 m)	Temperature Measurement (Object: 0.5 × 0.5 m)
12 m	30 m

▪ Typical Application

HIKMICRO products are classified into three levels according to their anti-corrosion performance. Refer to the following description to choose for your using environment.

No products could be used under HYDROGEN FLUORIDE environment. This model has No Specific PROTECTION.

Level	Description
Top-level Protection	HIKMICRO products at this level are equipped for use in areas where professional anti-corrosion protection is a must. Usually it is used in salt-spray and sulfur dioxide (with a concentration volume ratio of less than 0.67%) environment, such as chemical plants and coastal lines.
Moderate Protection	HIKMICRO products at this level are equipped for use in areas with moderate anti-corrosion demands. Typical application scenarios include coastal areas about 2 kilometers (1.24 miles) away from coastlines, as well as areas affected by acid rain.
No Specific Protection	HIKMICRO products at this level are equipped for use in areas where no specific anti-corrosion protection is needed.

▪ Note

COMPLIANCE NOTICE: The thermal series products might be subject to export controls in various countries or regions, including without limitation, the United States, European Union, United Kingdom and/or other member countries of the Wassenaar Arrangement. Please consult your professional legal or compliance expert or local government authorities for any necessary export license requirements if you intend to transfer, export, re-export the thermal series products between different countries.

▪ Available Model

HM-TD3028T-3/Q(B)

▪ Dimension

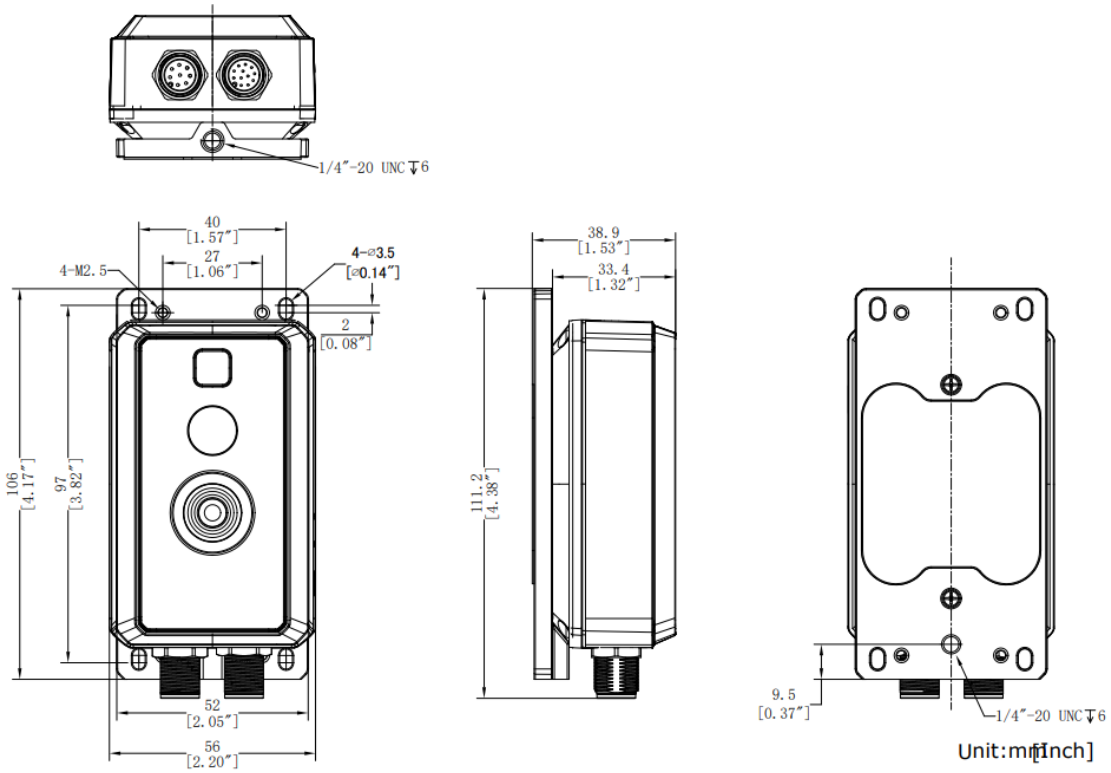

- **Accessory**
- **Optional**

DS-2924ZJ


See Far, Go Further

www.hikvision.com
support@hikvision.com

© Hangzhou Hikvision Digital Technology Co., Ltd. Unless otherwise agreed, Hikvision makes no warranties, express or implied. We reserve the right to introduce modifications without notice.

HIKVISION®