DS-2DF7A436IXG-EL
4 MP 36× IR Network Speed Dome





Hikvision DS-2DF7A436IXG-EL(Y) 4 MP 36 × IR Network Speed Dome adopts 1/1.8" progressive scan CMOS chip. With the 36 × optical zoom lens, the camera offers more details over expansive areas.
This series of cameras can be widely used for wide ranges of high-definition, such as the rivers, forests, roads, railways, airports, ports, squares, parks, scenic spots, stations and large venues, etc.
Hikvision has been dedicated to develop products with security since established.
Hikvision always follows security by design principle and has adopted many methods of security technologies into our product development lifecycle, including terminal security, data security, application security, network security, and privacy protection. In the meantime, the security technologies used by Hikvision are all in compliance with local applicable laws and safety regulations. These security measures could enhance product's cyber security protection capability and protect your devices as well as your data from malicious cyber attacks.

- 1/1.8" Progressive Scan CMOS
- High quality imaging with 4 MP resolution
- 36 × optical zoom and 16 × digital zoom provide close up views over expansive areas
- Excellent low-light performance via DarkFighter 2.0 technology
- Clear imaging against strong back light due to 150 dB AWDR technology
- Supports rapid focus
- Smart Pan-Tilt Correction
- Built-in gyroscope to ensure stable image output
- Water and dust resistant (IP67), vandal proof (IK10) and corrosion resistant (NEMA 4X, optional)

▪ Specification

Camera	
Image Sensor	1/1.8 " progressive scan CMOS
Max. Resolution	2688 × 1520
Min. Illumination	Color: 0.0003 Lux @ (F1.2, AGC ON),B/W: 0.0001 Lux @ (F1.2, AGC ON),0 Lux with IR
Shutter Speed	1/30 s to 1/30,000 s
Day & Night	ICR
Zoom	36 × optical,16 × digital
Slow Shutter	yes
Lens	
Focal Length	6.0 mm to 216 mm
FOV	Horizontal field of view: 59.1° to 2.0°, vertical field of view: 34.1° to 1.1°, diagonal field of view: 67.1° to 2.3°
Focus	Auto,semi-auto,manual,rapid focus
Aperture	F1.2
Zoom Speed	Approx. 4.5 s
Illuminator	
Supplement Light Range	IR distance: up to 300 m
PTZ	
Movement Range (Pan)	360°
Movement Range (Tilt)	-20° to 90° (auto flip)
Pan Speed	Pan speed: configurable from 0.1° to 550°/s, preset speed: 550°/s,Up to MAX 700°/s
Tilt Speed	Tilt speed: configurable from 0.1° to 300°/s, preset speed 300°/s,Up to MAX 300°/s
Proportional Pan	yes
Presets	300
Preset Freezing	yes
Patrol Scan	8 patrols, up to 32 presets for each patrol
Park Action	Preset,patrol scan
3D Positioning	yes
PTZ Status Display	yes
Scheduled Task	Preset,patrol scan,dome reboot,dome adjust,aux output
Power-off Memory	yes
Video	
Main Stream	50 Hz: 100 fps (1920 × 1080) 50 fps (2688 × 1520, 2560 × 1440, 1280 × 720) 60 Hz: 120 fps (1920 × 1080) 60 fps (2688 × 1520, 2560 × 1440, 1280 × 720) *High frame rate is supported under monitoring mode only.
Sub-Stream	50 Hz: 25 fps (704 × 576, 640 × 480, 352 × 288) 60 Hz: 30 fps (704 × 480, 640 × 480, 352 × 240)
Third Stream	50 Hz: 25 fps (1920 × 1080, 1280 × 960, 1280 × 720, 704 × 576, 640 × 480, 352 × 288) 60 Hz: 30 fps (1920 × 1080, 1280 × 960, 1280 × 720, 704 × 480, 640 × 480, 352 × 240)
Video Compression	Main stream: H.265+/H.265/H.264+/ H.264, Sub-stream: H.265/H.264/MJPEG, Third stream: H.265/H.264/MJPEG
Video Bit Rate	32 Kbps to 16384 Kbps
H.264 Type	baseline profile||main profile||high profile

H.265 Type	main profile
Scalable Video Coding (SVC)	yes
Region of Interest (ROI)	fixed region
Audio	
Audio Compression	G.711,G.722.1,G.726,MP2L2,PCM,AAC-LC
Audio Bit Rate	64 Kbps (G.711)/16 Kbps (G.722.1)/16 Kbps (G.726)/32 to 192 Kbps (MP2L2)16 Kbps to 64 Kbps(AAC-LC)
Network	
Protocols	IPv4/IPv6,HTTP,HTTPS,802.1x,Qos,FTP,SMTP,UPnP,SNMP,DNS,DDNS,NTP,RTSP,RTCP,RTP,TCP/IP,UDP,IGMP,ICMP,DHCP,PPPoE,Bonjour,WebSocket,WebSockets
Simultaneous Live View	Up to 20 channels
API	ONVIF (Profile S, Profile G, Profile T, Profile M),ISAPI,SDK,ISUP
User/Host	Up to 32 users. 3 levels: Administrator, Operator and User
Security	Password protection,complicated password,HTTPS encryption,802.1X authentication (EAP-TLS, EAP-LEAP, EAP-MD5),watermark,IP address filter,basic and digest authentication for HTTP/HTTPS,WSSE and digest authentication for Open Network Video Interface, RTP/RTSP over HTTPS,control timeout settings,security audit log,TLS 1.3,host authentication (MAC address),TPM 2.0 (FIPS 140-2 level 2)
Network Storage	NAS (NFS, SMB/CIFS)
Client	iVMS-4200,Hik-Connect,HikCentral Pro
Web Browser	IE11, Chrome 57.0+, Firefox 52.0+, Safari 11+
Image	
Day/Night Switch	day, night, auto, scheduled-switch
SNR	≥52dB
Defog	Optical defog
Wide Dynamic Range (WDR)	150 dB
Image Stabilization	EIS (Built-in gyroscope to improve EIS performance)
Image Enhancement	BLC, HLC, 3D DNR
Privacy Mask	mask color or mosaic configurable,24 programmable polygon privacy masks
Regional Focus	yes
Regional Exposure	yes
Interface	
Video Output	CVBS: 1.0 V[p-p]/75 Ω, PAL/NTSC, BNC connector
Ethernet Interface	RJ45, self-adaptive 10M/100M Ethernet port
Audio	1 input (line in), max. input amplitude: 2-2.4 vpp, input impedance: 1 KΩ ± 10%, 1 output (line out), line level, output impedance: 600 Ω
Alarm	7 alarm inputs, 2 alarm outputs
RS-485	HIKVISION, Pelco-P, Pelco-D, self-adaptive
On-board Storage	Built-in memory card slot, support microSD/microSDHC/microSDXC card, up to 1 TB.
Event	
Basic Event	Motion detection,video tampering alarm,exception (network disconnected, IP address conflict, illegal login, HDD full, HDD error),alarm input and output,vandal-proof alam,audio exception detection,unattended baggage detection, object removal detection
Linkage	Upload to FTP/NAS/memory card,notify surveillance center,send email,trigger recording,and PTZ actions (such as preset, patrol scan, pattern scan)

Deep Learning Function	
Face Capture	Detects up to 30 faces simultaneously, Uploads face with background and closed-up face pictures,Supports detecting, tracking, capturing, grading, selecting of face in motion, and outputs the best face picture
Perimeter Protection	Line crossing detection, region entrance detection, intrusion detection, region exiting detection
Multi-Target-Type Detection	Supports simultaneous detection and capture of human body, face and vehicle, Gets 7 face features, 14 human body features and 8 vehicle features
Face Comparison	Up to 10 face libraries. 30000 faces for each library. 150000 faces in total, Recognizes face identity via face modeling, grading and comparing to those in face library, Supports face library encryption
Road Traffic and Vehicle Detection	Smart Function: Support license plate recognition of vehicles and motorcycles (only in checkpoint scenario) Support vehicle attribute detection, including vehicle type, color, brand, driving direction, etc. Support vehicle and non-vehicle counting Blocklist and allowlist: up to 10,000 records LPR Countries/Regions: 4 areas (Europe, Middle East, Asia-Pacific, Africa) and more than 124 countries/regions Accuracy (Under recommended installation and lighting conditions): License plate recognition rate ≥98% Capture rate ≥99% Driving direction accuracy rate ≥98% Vehicle Capture Speed: Front installation in checkpoint scenario: up to 120 km/h Side installation: up to 80 km/h Capture Mode: License Plate and Vehicle Mode, Vehicle Priority Mode
Linkage and Tracking	
Smart Tracking	Manual tracking, auto-tracking 3.0
Object Tracking	Support person arming. When the device detects the armed face or human body in the monitoring scene, it triggers alarms, and tracks and captures the target. During the tracking, the target location and other related information are uploaded.
General	
Power	36 VDC± 25%, max. 90 W (Max. 52 W, including max. 6.4 W for IR and max. 8 W for heater) PoE 802.3bt, type4, class8, max. 90W (Max. 52 W, including max. 6.4 W for IR and max. 8 W for heater)
Dimension	Ø214.95 mm × 297.1 mm (Ø8.46" × 11.7")
Weight	Approx. 5 kg (11.02 lb.)
Operating Condition	Temperature: -40°C to 70°C (-40°F to 158°F) , Humidity: ≤ 95%
General Function	mirror, password protection, watermark, IP address filter

Language	33 languages: English, Russian, Estonian, Bulgarian, Hungarian, Greek, German, Italian, Czech, Slovak, French, Polish, Dutch, Portuguese, Spanish, Romanian, Danish, Swedish, Norwegian, Finnish, Croatian, Slovenian, Serbian, Turkish, Korean, Traditional Chinese, Thai, Vietnamese, Japanese, Latvian, Lithuanian, Portuguese (Brazil), Ukrainian
Approval	
Safety	CB (IEC 62368-1: 2014 + A11),CE-LVD (EN 62368-1: 2014/A11: 2017),LOA (IEC/EN 60950-1)
EMC	CE-EMC (EN 55032: 2015, EN 61000-3-2: 2019, EN 61000-3-3: 2013, EN 50130-4: 2011 +A1: 2014),IC VoC (ICES-003: Issue 6, 2019),RCM (AS/NZS CISPR 32: 2015),KC (KN 32: 2015, KN 35: 2015)
Environment	CE-RoHS (2011/65/EU); WEEE (2012/19/EU); Reach (Regulation (EC) No 1907/2006)
Protection	Lightning Protection, Surge Protection and Voltage Transient Protection,±6kV Line to Gnd, ±3kV Line to Line,IEC61000-4-5||IP67 Standard||IK10
Anti-Corrosion Protection	-Y: NEMA 4X (NEMA 250-2018)

▪ DORI

The DORI (detect, observe, recognize, identify) distance gives the general idea of the camera ability to distinguish persons or objects within its field of view.
It is calculated based on the camera sensor specification and the criteria given by EN 62676-4: 2015.

DORI	Detect	Observe	Recognize	Identify
Definition	25 px/m	63 px/m	125 px/m	250 px/m
Distance (Tele)	2979.3 m (9774.61 ft)	1182.3 (3878.94 ft)	595.9 m (1955.05 ft)	297.9 (977.36 ft)

▪ Typical Application

Hikvision products are classified into three levels according to their anti-corrosion performance. Refer to the following description to choose for your using environment.

DS-2DF7A436IXG-ELY has MODERATE protection. DS-2DF7A436IXG-EL has NO SPECIFIC protection.

Level	Description
Top-level protection	Hikvision products at this level are equipped for use in areas where professional anti-corrosion protection is a must. Typical application scenarios include coastlines, docks, chemical plants, and more.
Moderate protection	Hikvision products at this level are equipped for use in areas with moderate anti-corrosion demands. Typical application scenarios include coastal areas about 2 kilometers (1.24 miles) away from coastlines, as well as areas affected by acid rain.
No specific protection	Hikvision products at this level are equipped for use in areas where no specific anti-corrosion protection is needed.

▪ Available Model

DS-2DF7A436IXG-EL

▪ Dimension

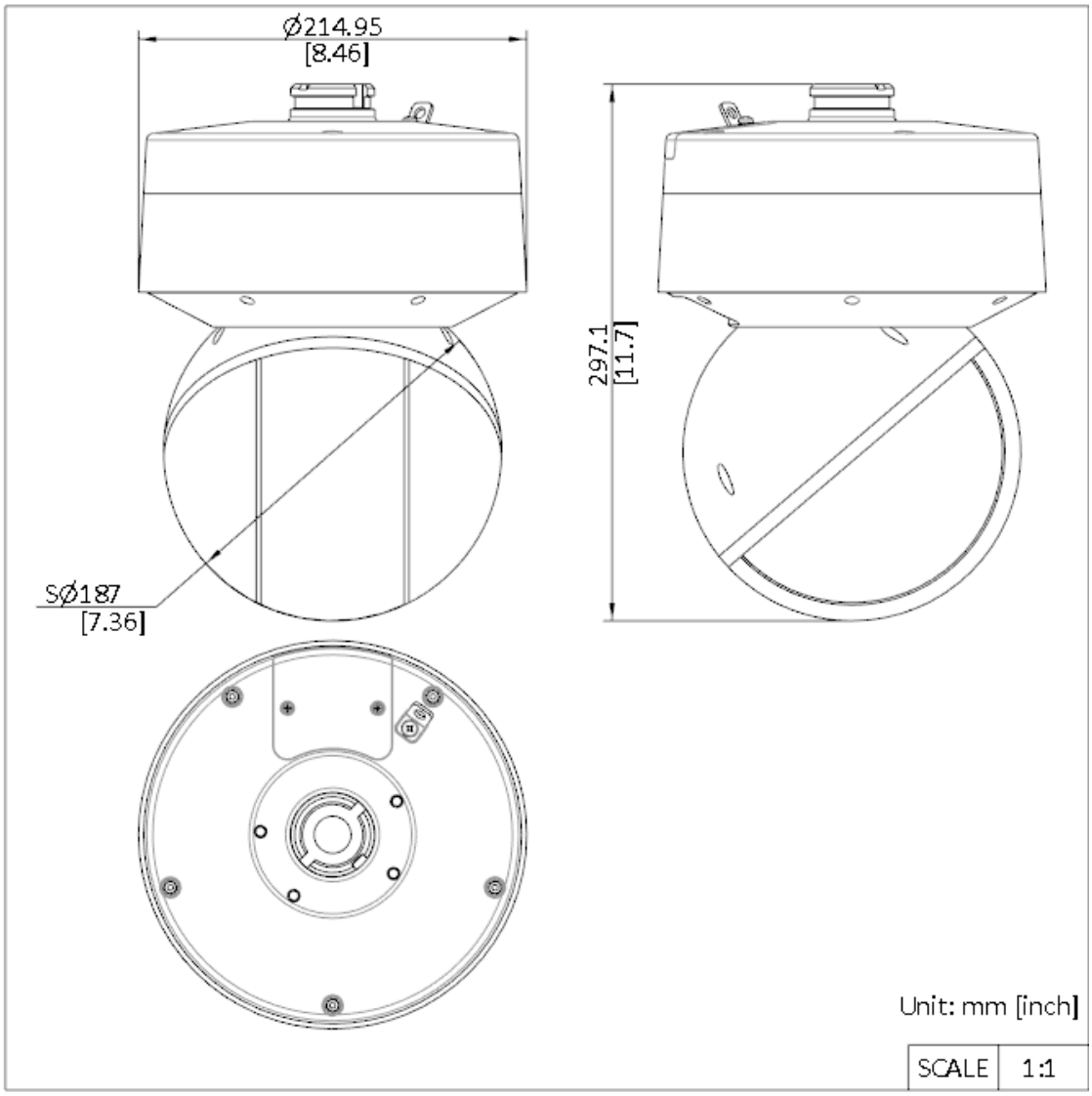

▪ Accessory

▪ Optional

DS-1673ZJ-P Horizontal pole mount	DS-1684ZJ-P Vertical pole mount	DS-1674ZJ-P Junction box	DS-4650ZJ-PC Vertical pole mount	DS-4660ZJ-PC Corner mount
				
DS-1276ZJ-P Corner mount	**DS-2HZ9SDF37G-Y Sunshade for DF7A Series**	**DS-4603ZJ-PA Wall mount**	**DS-4612ZJ-PA Pendant Mount**	

			

See Far, Go Further

www.hikvision.com
support@hikvision.com

© Hangzhou Hikvision Digital Technology Co., Ltd. Unless otherwise agreed, Hikvision makes no warranties, express or implied. We reserve the right to introduce modifications without notice.

HIKVISION®