HIKVISION

DS-2CD2D45G2/S-U/4G
Covert Network Camera

AcuSense



HD | 4G | HEOP | 3D DNR | H.265+ | WDR

- High quality imaging with 4 MP resolution
- Efficient H.265+ compression technology to save bandwidth and storage
- Clear imaging against strong back light due to 120 dB true WDR technology
- 3D DNR technology delivers clean and sharp images
- Built-in microphone for real-time audio security
- LTE-TDD/LTE-FDD 4G wireless network transmission, support Micro SIM card

▪ Specification

Camera	
Image Sensor	1/3" Progressive Scan CMOS
Max. Resolution	2688 × 1520
Min. Illumination	Color: 0.008 Lux @ (F2.0, AGC ON)
Shutter Time	1 s to 1/100,000 s
Lens	
Focal Length & FOV	2.8 mm, horizontal FOV 90.5°, vertical FOV 46.2°, diagonal FOV 110° 4 mm, horizontal FOV 74°, vertical FOV 38.2°, diagonal FOV 89.5°
Lens Mount	M12
Iris Type	Fixed
Aperture	2.8 mm: F2.0 4 mm: F2.0
Depth of Field	2.8 mm: 0.7 m to 2.1 m 4 mm: 1.0 m to 3.3 m
DORI	
DORI	2.8 mm: D: 78.4 m, O: 31.1 m, R: 15.7 m, I: 7.8 m 4 mm: D: 94.4 m, O: 37.5 m, R: 18.9 m, I: 9.4 m
HEOP	
Open Resources	Memory: 60 MB, Smart RAM: 370 MB, eMMC: 2 GB
Video	
Main Stream	50 Hz: 25 fps (2688 × 1520, 2560 × 1440, 1920 × 1080, 1280 × 720) 60 Hz: 30 fps (2688 × 1520, 2560 × 1440, 1920 × 1080, 1280 × 720)
Sub-Stream	50 Hz: 25 fps (704 × 576, 640 × 480) 60 Hz: 30 fps (704 × 480, 640 × 480)
Third Stream	50 Hz: 25 fps (1920 × 1080, 1280 × 720, 704 × 576, 640 × 480) 60 Hz: 30 fps (1920 × 1080, 1280 × 720, 704 × 480, 640 × 480)
Video Compression	Main stream: H.264/H.265/H.264+/H.265+, Sub-stream: H.264/H.265/MJPEG, Third stream: H.264/H.265
H.264 Type	Baseline Profile,Main Profile,High Profile
H.265 Type	Main Profile
Bit Rate Control	CBR,VBR
Scalable Video Coding (SVC)	H.264 and H.265 encoding
Region of Interest (ROI)	4 fixed regions for each stream
Audio	
Audio Type	Mono sound
Audio Compression	G.711/G.722.1/G.726/MP2L2/PCM/MP3/AAC-LC
Audio Bit Rate	64 Kbps (G.711)/16 Kbps (G.722.1)/16 Kbps (G.726)/32 to 192 Kbps (MP2L2)/8 to 48 Kbps (PCM)/8 to 320 Kbps (MP3)/16 to 64 Kbps (AAC-LC)
Audio Sampling Rate	8 kHz/16 kHz/32 kHz/48 kHz
Environment Noise Filtering	Yes

Network	
Protocols	DNS, SNMP, 802.1X, IGMP, NTP, TCP/IP, HTTPS, SMTP, DHCP, HTTP, IPv4, FTP, DDNS, IPv6, RTCP, WebSockets, RTSP, SSL/TLS, UPnP, RTP, Bonjour, QoS, SFTP, UDP, WebSocket, ICMP
Simultaneous Live View	Up to 20 channels
API	ONVIF, ISAPI, SDK, ISUP
User/Host	Up to 32 users 3 user levels: administrator, operator, and user
Network Storage	NAS (NFS, SMB/CIFS)
Security	Password protection, complicated password, HTTPS encryption, 802.1X authentication (EAP-TLS, EAP-LEAP, EAP-MD5), watermark, IP address filter, basic and digest authentication for HTTP/HTTPS, WSSE and digest authentication for Open Network Video Interface, RTP/RTSP over HTTPS, control timeout settings, security audit log, TLS 1.1/1.2/1.3, host authentication (MAC address)
Client	iVMS-4200, Hik-Connect
Web Browser	Plug-in required live view: IE 10, IE 11, Plug-in free live view: Chrome 57.0+, Firefox 52.0+, Edge 89+, Safari 11+, Local service: Chrome 57.0+, Firefox 52.0+, Edge 89+
Mobile Communication	
Standard	LTE-TDD,LTE-FDD
Frequency	EU: LTE-FDD: B1/3/5/7/8/20/28 LTE-TDD: B38/40/41
Uplink and Downlink Data Rate	Cat 4, uplink: 50 Mbps, downlink: 75 Mbps (FDD), uplink: 30.5 Mbps, downlink: 65.5 Mbps (TDD)
SIM Card Type	Micro SIM
Image	
Image Parameters Switch	Yes
Image Settings	Rotate mode,saturation,brightness,contrast,sharpness,adjustable by client software or web browser
Day/Night Switch	Day,Night,Auto,Schedule
Wide Dynamic Range (WDR)	120 dB
Image Enhancement	BLC,HLC,3D DNR,Distortion Correction
Privacy Mask	Yes
Image Stabilization	EIS
Interface	
Ethernet Interface	1 RJ45 10 M/100 M self-adaptive Ethernet port
Reset Key	Yes
Built-in Microphone	1 built-in microphone
Event	
Basic Event	Motion detection,video tampering alarm,network disconnected,IP address conflict,illegal login,HDD full,HDD error,video quality diagnosis,vibration detection
Smart Event	scene change detection,audio exception detection,defocus detection
Linkage	Upload to FTP/NAS/memory card,notify surveillance center,send email,trigger recording,trigger capture

Deep Learning Function	
Perimeter Protection	Line crossing, intrusion, region entrance, region exiting Support alarm triggering by specified target types (human and vehicle) Support combined event alarm triggering
Face Capture	Support Face Capture (with Face Attributes)
General	
Power	12 VDC ± 20%, 0.36 A, max. 4.32 W, Ø5.5 mm coaxial power plug
Material	Aluminum alloy
Dimension	50.96 mm × 55.0 mm × 35.9 mm (2.0" × 2.2" × 1.4")
Package Dimension	150 mm × 110 mm × 90 mm (5.9" × 4.3" × 3.5")
Weight	Approx. 75 g (0.16 lb.)
With Package Weight	Approx. 286 g (0.63 lb.)
Storage Conditions	-10 °C to 40 °C (14 °F to 104 °F). Humidity 95% or less (non-condensing) *Use the heatsink to ensure heat dissipation. Refer to Quick Start Guide for the heat dissipation requirement.
Startup and Operating Conditions	-10 °C to 40 °C (14 °F to 104 °F). Humidity 95% or less (non-condensing) *Use the heatsink to ensure heat dissipation. Refer to Quick Start Guide for the heat dissipation requirement.
Language	33 languages: English, Russian, Estonian, Bulgarian, Hungarian, Greek, German, Italian, Czech, Slovak, French, Polish, Dutch, Portuguese, Spanish, Romanian, Danish, Swedish, Norwegian, Finnish, Croatian, Slovenian, Serbian, Turkish, Korean, Traditional Chinese, Thai, Vietnamese, Japanese, Latvian, Lithuanian, Portuguese (Brazil), Ukrainian
General Function	Heartbeat,mirror,password protection,one-key reset
Approval	
EMC	CE-EMC: EN 55032: 2015+A11:2020+A1:2020, EN IEC 61000-3-2:2019+A1:2021, EN 61000-3-3:2013+A1:2019+A2:2021, EN 50130-4: 2011+A1:2014, RCM: EN 55032:2015+A11:2020+A1:2020, EN 50130-4:2011 +A1:2014, EN 301 489-1 V2.2.3, EN 301 489-17 V3.2.4, EN 301 489-52 V1.2.1, EN 300 328 V2.2.2, EN IEC 62311: 2020, AS/NZS 2772.2:2016+A1:2018,ARPANSA RPS S-1 Radiation Protection Series S-1 (Rev.1)
Safety	CB: IEC 62368-1:2014, CE-LVD: EN 62368-1:2014+A11:2017
RF	CE-RED: EN 301 489-1 V2.2.3, EN 301 489-17 V3.2.4, EN 301 489-52 V1.2.1, EN 300 328 V2.2.2, EN IEC 62311: 2020
Environment	CE-RoHS: 2011/65/EU, WEEE: 2012/19/EU, Reach: Regulation (EC) No 1907/2006
Transport Certification	IATA Dangerous Goods Regulations, Dangerous Goods List, International Maritime Dangerous Goods Code

▪ Available Model

DS-2CD2D45G2/S-U/4G(2.8mm)

DS-2CD2D45G2/S-U/4G(4mm)

▪ Dimension

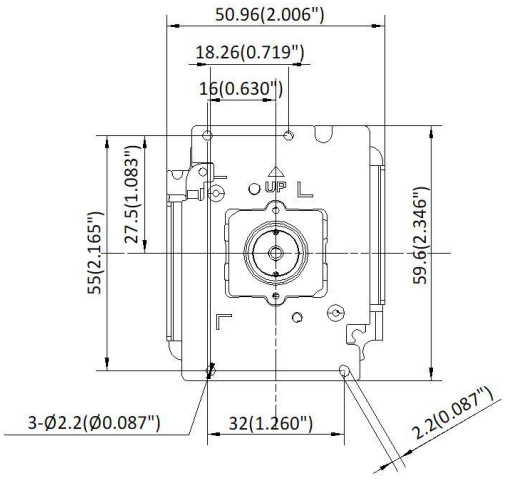

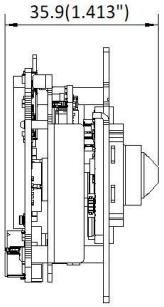

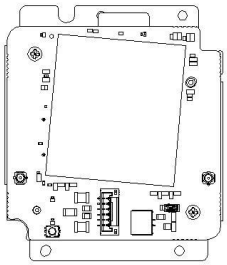

Unit:mm(inch)

Camera mounting hole(mm)	Camera mounting hole(inch)
2xØ2.2	2xØ0.087"

See Far, Go Further

www.hikvision.com
support@hikvision.com

© Hangzhou Hikvision Digital Technology Co., Ltd. Unless otherwise agreed, Hikvision makes no warranties, express or implied. We reserve the right to introduce modifications without notice.

HIKVISION®