DS-2DF3C400SCG-D/4G/WL15(F1)
3C Series 4MP Water-Level Detection Network Speed Dome





Hikvision DS-2DF3C400SCG 4MP Network Speed Dome adopts 1/1.8" progressive scan CMOS.
Hikvision has been dedicated to develop products with security since established.
Hikvision always follows security by design principle and has adopted many methods of security technologies into our product development lifecycle, including terminal security, data security, application security, network security, and privacy protection. In the meantime, the security technologies used by Hikvision are all in compliance with local applicable laws and safety regulations. These security measures could enhance product's cyber security capability and protect your devices as well as your data from malicious cyber attacks.

- 24/7 colorful imaging
- High quality imaging with 4 MP resolution
- Clear imaging against strong back lighting thanks to 120 dB WDR technology
- 30m white light distance
- Water and dust resistant (IP67)
- Supports 4G and low power consumption design. The lowest power consumption is less than 1 W.
- Supports water level detection with millimeter wave radar. The detection distance ranges from 0.15 m to 15 m, and the precision reaches to ±1 mm.

▪ Specification

Radar Detection	
Detection Distance	Water Level: 0.15-15 m
Distance Measurement Accuracy	± 1 mm
Camera	
Image Sensor	1/1.8" Progressive Scan CMOS
Max. Resolution	2560 × 1440
Min. Illumination	Color: 0.0005 Lux @ (F1.0, AGC ON),B/W: 0.0001 Lux @ (F1.0, AGC ON),0 Lux with light
Shutter Speed	1/1 s to 1/30000 s
Slow Shutter	Yes
Lens	
Focal Length	4 mm
FOV	Horizontal field of view: 67°, vertical field of view: 41°, diagonal field of view: 75°
Aperture	F1.0
Illuminator	
Supplement Light Type	White Light
Supplement Light Range	White light distance: up to 30 m
Smart Supplement Light	Yes
PTZ	
Movement Range (Pan)	0° to 340°
Movement Range (Tilt)	-20° to 90°
Pan Speed	Pan speed: configurable from 0.1° to 40°/s, preset speed: 40°/s
Tilt Speed	Tilt speed: configurable from 0.1° to 40°/s, preset speed 40°/s
Presets	300
Patrol Scan	8 patrols, up to 32 presets for each patrol
Park Action	Preset,pattern scan
3D Positioning	Yes
PTZ Status Display	Yes
Scheduled Task	patrol scan,Preset,dome reboot,dome adjust,aux output
Power-off Memory	Yes
Video	
Main Stream	50 Hz: 25 fps (2560 × 1440, 1920 × 1080, 1280 × 960, 1280 × 720), 60 Hz: 30 fps (2560 × 1440, 1920 × 1080, 1280 × 960, 1280 × 720)
Sub-Stream	50 Hz: 25 fps (704 × 576, 640 × 480, 352 × 288) 60 Hz: 30 fps (704 × 480, 640 × 480, 352 × 240)
Third Stream	50 Hz: 25 fps (1920 × 1080, 1280 × 960, 1280 × 720, 704 × 576, 640 × 480, 352 × 288) 60 Hz: 30 fps (1920 × 1080, 1280 × 960, 1280 × 720, 704 × 480, 640 × 480, 352 × 240)
Video Compression	Main stream: H.265+/H.265/H.264+/H.264, Sub-stream: H.265/H.264/MJPEG, Third stream: H.265/H.264/MJPEG
Video Bit Rate	32 Kbps to 16 Mbps
H.264 Type	Baseline profile,Main profile,High profile
H.265 Type	Main profile
Scalable Video Coding (SVC)	H.264 and H.265 encoding
Region of Interest (ROI)	8 fixed regions for each stream

Audio	
Audio Compression	G.711,G.722.1,G.726,MP2L2,PCM,MP3,AAC-LC
Audio Bit Rate	8 to 320 Kbps (MP3),64 Kbps (G.711),16 Kbps (G.722.1),16 Kbps (G.726),32 to 192 Kbps (MP2L2),16 to 64Kbps (AAC-LC)
Audio Sampling Rate	MP2L2: 16kHz，32kHz，48kHz,PCM：8kHz，16kHz，32kHz，48kHz,AAC-LC: 16kHz，32kHz，48kHz,MP3：8 kHz，16 kHz，32 kHz，48 kHz
Network	
Protocols	IPv4/IPv6,HTTP,HTTPS,QoS,FTP,TCP/IP,ICMP,DHCP,DNS,DDNS,RTP,RTSP,RTCP,UPnP,SMTP,SNMP,IGMP,UDP,Bonjour,NTP,ISUP
Simultaneous Live View	Up to 20 channels
API	ISAPI,SDK,ISUP
User/Host	Up to 32 users. 3 user levels: administrator, operator, and user
Security	Password protection,complicated password,IP address filter,HTTPS encryption,host authentication (MAC address),watermark
Network Storage	NAS (NFS, SMB/CIFS)
Client	iVMS-4200
Web Browser	IE11, Chrome 57.0+, Firefox 52.0+, Safari 11+
Wireless (Wi-Fi)	
Wireless Range	Up to 50 m (The performance varies based on actual environment)
Wireless (Mobile Communication)	
Mobile Communication Type	4G
Frequency	TDD-LTE: Band38/39/40/41,FDD-LTE: Band 1/3/5/8,WCDMA:Band1/8,TD-SCDMA: B34/39,EVDO/CDMA1X: BC0,GSM:Band:3/8
Standard	TDD-LTE/FDD-LTE/TD-SCDMA/WCDMA/EVDO/CDMA/GSM
SIM	Nano SIM
Image	
Image Parameters Switch	Yes
Image Settings	Saturation, brightness, contrast, sharpness, gain
Day/Night Switch	Day,night,auto,schedule
Wide Dynamic Range (WDR)	120 dB
SNR	≥ 52 dB
Defog	Digital defog
Privacy Mask	24 programmable polygon privacy masks, mask color or mosaic configurable
Regional Exposure	Yes
Interface	
Ethernet Interface	1 RJ45 10M/100M self-adaptive Ethernet port
On-board Storage	Built-in memory card slot, support microSD/microSDHC/microSDXC card, up to 256 GB
Audio	1 input (line in), max. input amplitude: 2-2.4 vpp, input impedance: 1 KΩ ± 10%, 1 output (line out), line level, output impedance: 600 Ω
Alarm	2 input(s), 1 output(s)
RS-485	1 RS-485 (,HIKVISION, Pelco-P, Pelco-D)
Reset	Yes
Event	
Basic Event	exception

Alarm Linkage	Upload to FTP/NAS/memory card,notify surveillance center,send email,trigger alarm output,trigger recording,and PTZ actions (such as preset),and PTZ actions (such as preset, patrol scan, pattern scan)
General	
Power	12 VDC ± 25%, max. 21 W
Dimension	145 mm × 182 mm × 232 mm (5.7" × 7.16" × 9.13")
Weight	Approx. 1.8 kg (3.97 lb.)
Material	ADC12
Operating Condition	-30 °C to 70 °C (-22 °F to 158 °F). Humidity 95% or less (non-condensing)
Heater	Yes
Wiper	No
Demist	Yes
Language	33 languages: English, Russian, Estonian, Bulgarian, Hungarian, Greek, German, Italian, Czech, Slovak, French, Polish, Dutch, Portuguese, Spanish, Romanian, Danish, Swedish, Norwegian, Finnish, Croatian, Slovenian, Serbian, Turkish, Korean, Traditional Chinese, Thai, Vietnamese, Japanese, Latvian, Lithuanian, Portuguese (Brazil), Ukrainian
Approval	
EMC	CE-EMC (EN 55032: 2015, EN 61000-3-2: 2019, EN 61000-3-3: 2013 + A1: 2019, EN 50130-4: 2011 + A1: 2014),RCM (AS/NZS CISPR 32: 2015),IC (ICES-003: Issue 7),KC (KN 32: 2015, KN 35: 2015)
Safety	CE-LVD (EN 62368-1: 2014/A11: 2017),CB (IEC 62368-1: 2014 + A11)
Environment	CE-RoHS (2011/65/EU),WEEE (2012/19/EU),Reach (Regulation (EC) No 1907/2006)
Protection	IP67 (IEC 60529-2013),IK10 (IEC 62262:2002),TVS 6K V lightning protection, surge protection and voltage transient protection

▪ DORI

The DORI (detect, observe, recognize, identify) distance gives the general idea of the camera ability to distinguish persons or objects within its field of view.
It is calculated based on the camera sensor specification and the criteria given by EN 62676-4: 2015.

DORI	Detect	Observe	Recognize	Identify
Definition	25 px/m	63 px/m	125 px/m	250 px/m
Distance (Tele)	55.17m	21.89m	11.05m	5.5m

▪ Available Model

DS-2DF3C400SCG-D/4G/WL15(F1)

▪ Dimension

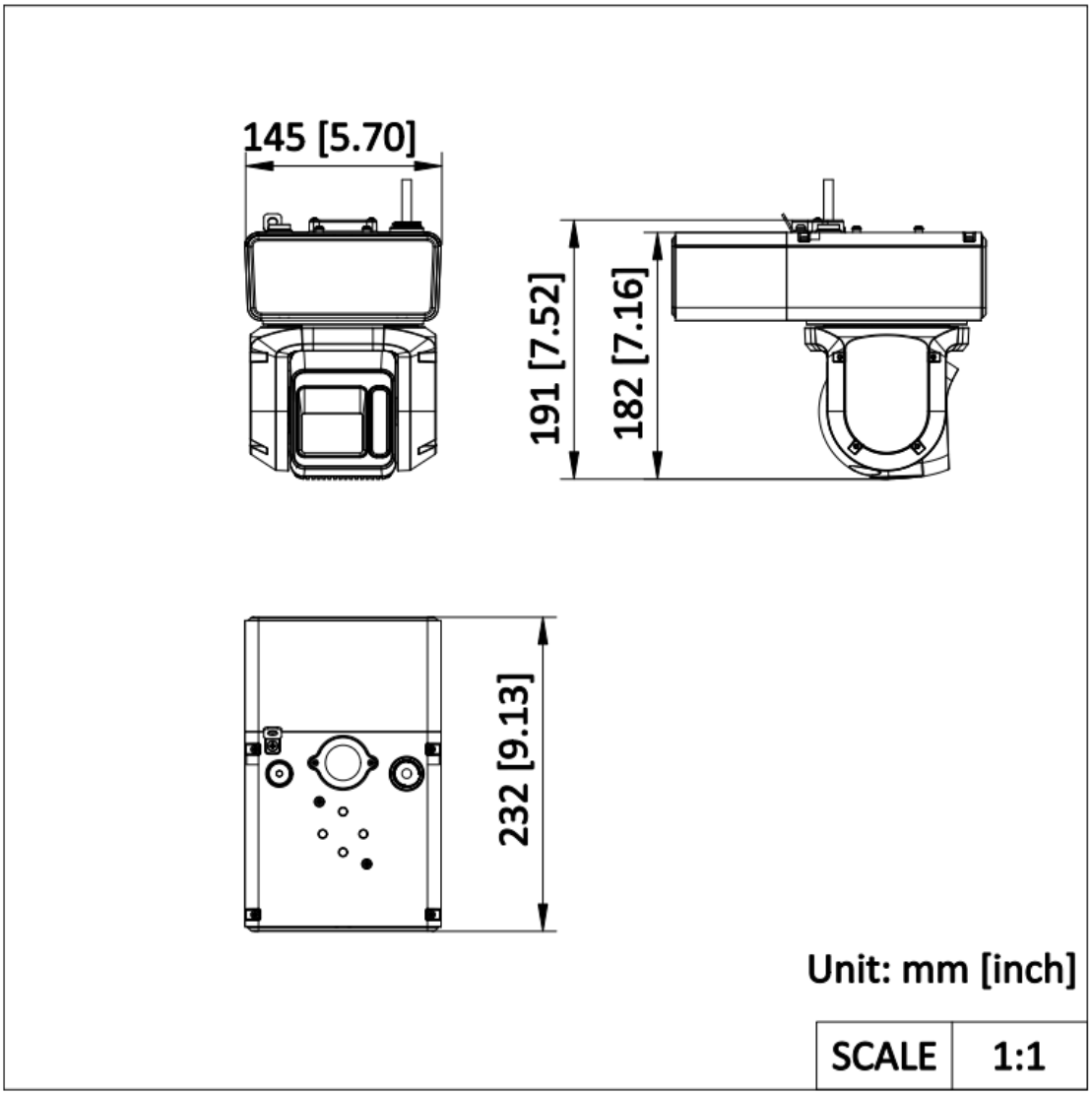

- **Accessory**
- **Optional**

DS-2115ZJ-P


See Far, Go Further

www.hikvision.com
support@hikvision.com

© Hangzhou Hikvision Digital Technology Co., Ltd. Unless otherwise agreed, Hikvision makes no warranties, express or implied. We reserve the right to introduce modifications without notice.

HIKVISION®