DS-DL126033W
LED Wall-mounted Bracket



- Cost-effective
- Block-based design
- Quick and easy installation
- Thinner and lighter
- Extension supported

▪ Specification

General	
Package Dimension (W × H × D)	1240 (W) mm × 380 (H) mm × 80 (D) mm (48.86 '' × 14.97 '' × 3.15 '')
Gross Weight	6.9± 0.5 Kg (15.23± 1.1 lb)
Net Weight	4.0 ± 0.5 Kg (8.83 ± 1.1 lb)
Dimension (W × H × D)	1200 mm × 337.5 mm × 40 mm (47.24" × 13.29" × 1.57")
Default Parameters	
Color	Black
Material	AL6063
Surface Treatment	Electrostatic spraying

▪ Available Model

DS-DL126033W

▪ Dimension

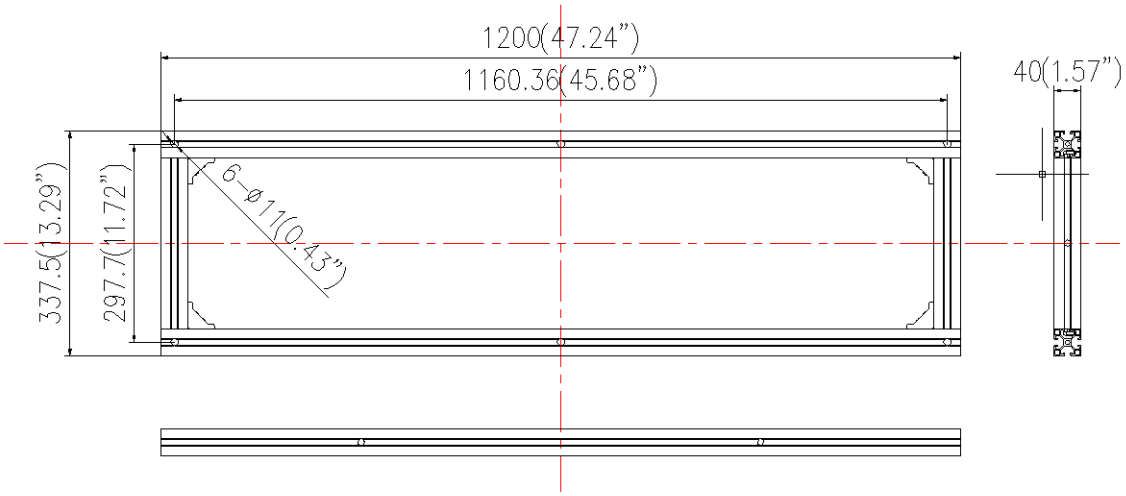

See Far, Go Further

www.hikvision.com
support@hikvision.com

© Hangzhou Hikvision Digital Technology Co., Ltd. Unless otherwise agreed, Hikvision makes no warranties, express or implied. We reserve the right to introduce modifications without notice.

HIKVISION®