AE-VC583I-IS/P(V)/(H)
Mobile ANPR Camera



- 1/2.7" Progressive Scan CMOS
- 4mm/6mm/8mm/12mm/16mm fixed lens
- High quality imaging with 5 MP resolution
- Clear imaging against strong back light due to 120 dB true WDR technology
- Efficient H.265+ compression technology
- Water and dust resistant (IP68&IP69K) and vandal proof (IK10)
- Advanced streaming technology that enables smooth live view and data self-correcting in poor network
- 3DNR technology delivers clean and sharp images
- The network camera can identify license plates in the Asia-Pacific region, the Middle East, Europe, Africa and the Americas

▪ Specification

Camera	
Image Sensor	1/2.7" Progressive Scan CMOS
Min. Illumination	Color: 0.01 Lux @ (F1.6, AGC ON), 0 Lux with IR
Slow Shutter	Not supported
P/N	P/N
Day & Night	IR cut filter
Angle Adjustment	Tilt: -25° to +55°
Power-off Memory	Yes
Lens	
Focal Length & FOV	4mm/6mm/8mm/12mm/16mm fixed lens 4mm:Horizontal FOV 78°, vertical FOV 55°, diagonal FOV 105° 6mm:Horizontal FOV 49°, vertical FOV 35°, diagonal FOV 63° 8mm:Horizontal FOV 37°, vertical FOV 28°, diagonal FOV 46° 12mm:Horizontal FOV 28°, vertical FOV 10°, diagonal FOV 30° 16mm:Horizontal FOV 17°, vertical FOV 13°, diagonal FOV 22°
Lens Mount	M12
Max. Aperture	F1.6
Illuminator	
IR Wavelength	850 nm
IR Range	Up to 20 m IR range
Video	
Max. Resolution	2560 × 1920
Main Stream	50Hz: 25fps (2560 × 1920, 1920 × 1080, 1280 × 720); 60Hz: 30fps (2560 × 1920, 1920 × 1080, 1280 × 720)
Sub-Stream	50Hz: 25fps (704 × 576, 640 × 480) ;60Hz: 30fps (704 × 480, 640 × 480)
Third Stream	50Hz: 25fps (1280 × 720)
Video Compression	Main stream: H.265/ H.264/Smart265/Smart264 Sub stream: H.265/H.264/Smart265/Smart264 Third stream: H.265/H.264/Smart265/Smart264
Video Bit Rate	First stream: 512 bps-16384 bps Second stream: 256 bps-4096 bps Third stream: 256 bps-4096 bps
H.264 Type	BaseLine Profile/Main Profile/High Profile
H.265 Type	Main Profile
Bit Rate Control	Constant Bit Rate, Variable Bit Rate
Network	
Protocols	TCP/IP, ICMP, HTTP, HTTPS, FTP, DHCP, DNS, DDNS, RTP, RTSP, NTP, IGMP, QoS, UDP,
Simultaneous Live View	Up to 10 channels
API	ONVIF (PROFILE S), ISAPI, SDK,
Security	Password protection, complicated password, HTTPS encryption, IP address filter, basic and digest authentication for HTTP/HTTPS
Web Browser	IE10+, Chrome45+,Edge41+,Firefox45+ (image download only available on IE)
Image	
Wide Dynamic Range (WDR)	120 dB

Image Settings	Saturation, brightness, contrast, sharpness are adjustable by client software or web browser
Day/Night Switch	Day/Night/Auto/Schedule
Image Enhancement	BLC, 2DNR ,3DNR
Interface	
Communication Interface	RJ45: 1 RJ45 10M/100M Ethernet port, 1Φ5.5mm coaxial power plug,1 alarm in,1 alarm out; 4pin: M12-D aviation plug, 1 molex power plug,1 alarm in,1 alarm out; 6pin: 6pin aviation plug for power supply,1 alarm in,1 alarm out;
General	
Product Dimension	Camera: 113 mm × 72 mm × 68 mm (4.45" × 2.83" × 2.68")
Protection	IP68(IEC 60529-2013), IP69K (ISO 20653: 2013), IK10 (IEC 62262: 2002)
Power Supply	DC:9~36V PoE(802.3af,36-57V)
Power Consumption	9W MAX
Storage Conditions	-30 °C to +75 °C (-22 °F to +167 °F) , Humidity 95% or less (non-condensing)
Startup and Operating Conditions	-30 °C to +75 °C (-22 °F to +167 °F) , Humidity 95% or less (non-condensing)
Weight	622g±5g
Language	English
Installation model	Horizontal installation:AE-VC583I-IS/P(H);Vertical installation:AE-VC583I-IS/P(V)
General Function	Anti-flicker, heartbeat, mirror, password protection,IP address filter
Approval	
Environment	CE: CE-RoHS(RoHS Directive 2011/65/EU+2015/863) WEEE: 2012/19/EU Reach SVHC: Regulation (EC) No 1907/2006
Electrical Safety Protection	IP68: IEC 60529-2013,IP69K,IK10: IEC 62262:2002
Automotive and Railway	EN50155: EN 50155-2007,EN 50155-2017 EN45545: (EN 45545-2:2013+A1:2015); E-MARK (ECE R10)
EMC	FCC: FCC-SDoC(ANSI C63.4,FCC Part15 sub B) CE: CE-EMC(EN 55024:2010 +A1:2015,EN 55032:2015,EN 61000-3-2:2014,EN 61000-3-3:2013) RCM: AS/NZS 60950.1:2003 + Am1, Am2 and Am3,AS/NZS CISPR 32:2015 IC: ICES-003 Issue 7:2020 KC: KN32:2015,KN35:2015
Safety	CB: IEC 60950-1 CE: CE-LVD(EN 60950-1:2006+A11:2009+A1:2010+A12:2011+A2:2013) LOA: SANS IEC60950-1 BIS: IS 13252(Part 1)2010+A1:2013+A2:2015

▪ Wiring

Cable Interfaces

Modle	Interface Form	Interface Definition	Interface Illustration
VC583	Alarm	1.ALARM IN 2.GND 3.ALARM OUT 4.GND	
	M12	1.IPC_TX+ 2.IPC_RX+ 3.IPC_TX- 4.IPC_RX-	
	MOLEX	1.IPC_DC12V+ 2.IPC_DC12V-	
	RJ45	1.IPC_RX- 2.IPC_RX+ 3.IPC_TX- 4.POE45- 5.POE45+ 6.IPC_TX+ 7.POE78- 8.POE78+	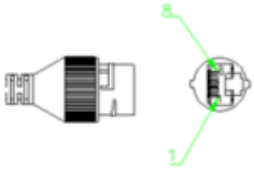
	DC	Core:IPC_DC12V+ Shell:IPC_DC12V-	

▪ Available Model

AE-VC583I-IS/P(H)(M12)(8mm)
AE-VC583I-IS/P(V)(M12)(8mm)
AE-VC583I-IS/P(V)(M12)(12mm)
AE-VC583I-IS/P(V)(M12)(16mm)
AE-VC583I-IS/P(V)(6F)(8mm)
AE-VC583I-IS/P(V)(6F)(12mm)
AE-VC583I-IS/P(V)(6F)(16mm)
AE-VC583I-IS/P(H)(M12)(12mm)
AE-VC583I-IS/P(H)(M12)(16mm)
AE-VC583I-IV(6F)(8mm)
AE-VC583I-IS/P(H)(6F)(12mm)
AE-VC583I-IS/P(H)(6F)(16mm)
AE-VC583I-IS/P(H)(RJ45)(8mm)
AE-VC583I-IS/P(V)(RJ45)(8mm)
AE-VC583I-IS/P(V)(RJ45)(12mm)
AE-VC583I-IS/P(V)(RJ45)(16mm)
AE-VC583I-IS/P(H)(RJ45)(12mm)
AE-VC583I-IS/P(H)(RJ45)(16mm)
AE-VC583I-IS/P(H)(M12)(4mm)
AE-VC583I-IS/P(V)(RJ45)(12mm)(SDK)
AE-VC583I-IS/P(H)(RJ45)(6mm)
AE-VC583I-IS/P(H)(RJ45)(4mm)
AE-VC583I-IS/P(H)(PON)(12mm)(BR_PMERJ)
AE-VC583I-IS/P(H)(PON)(8mm)(BR_PMERJ)
AE-VC583I-IS/P(H)(M12)(4mm)(RU_ＯＯＯ)
AE-VC584I-I/M(1.9mm)

▪ Dimension

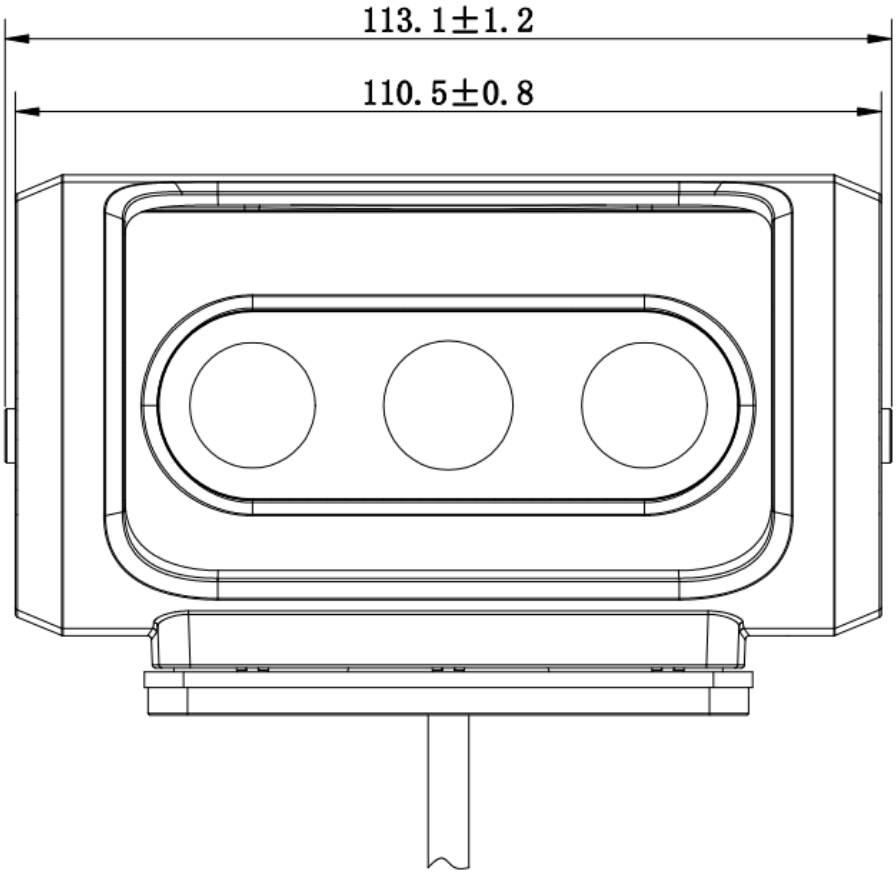
113.1±1.2
110.5±0.8

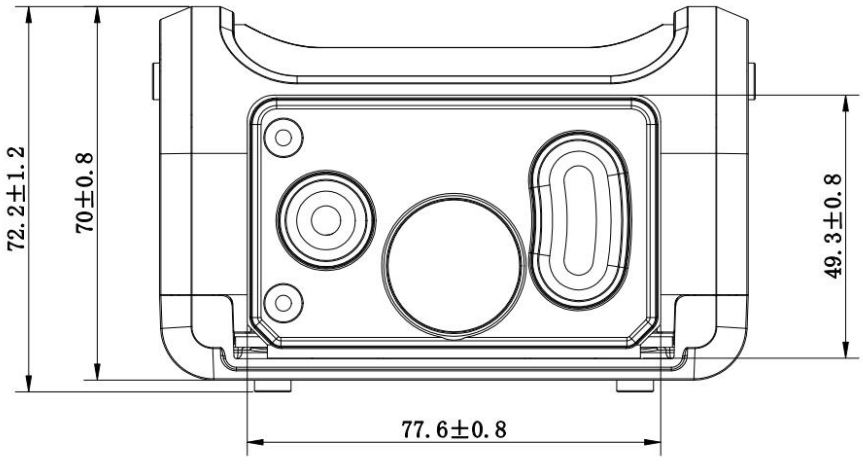
72.2±1.2
70±0.8
49.3±0.8
77.6±0.8

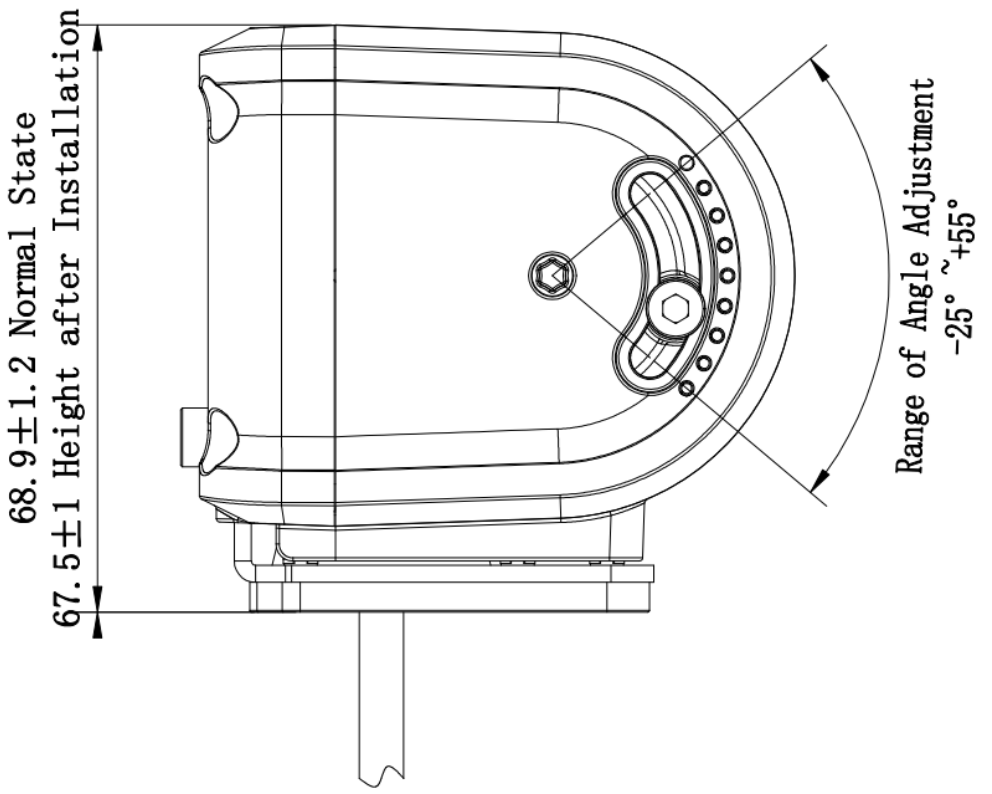
68.9±1.2 Normal State
67.5±1 Height after Installation
Range of Angle Adjustment
-25°~+55°

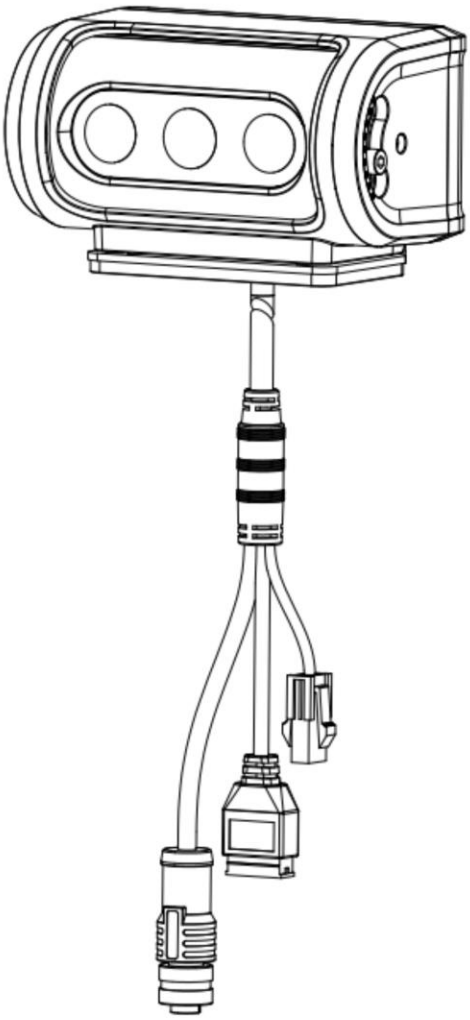

-6pin: 6pin aviation plug for power supply

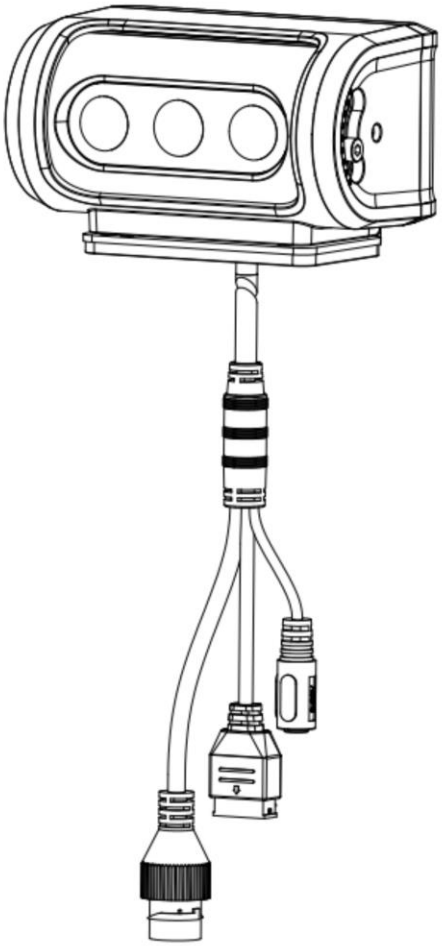

-RJ45: 1 RJ45 10M/100M Ethernet port,
1Φ5.5mm coaxial power plug

See Far, Go Further

www.hikvision.com
support@hikvision.com

© Hangzhou Hikvision Digital Technology Co., Ltd. Unless otherwise agreed, Hikvision makes no warranties, express or implied. We reserve the right to introduce modifications without notice.

HIKVISION®