DS-UPS1000-R
UPS





- Built-in AVR
- Super fast charging
- Wide input voltage range
- Overload protection
- Short circuit protection
- Surge protection

▪ Specification

Power	
UPS Capacity	1000 VA / 600 W
Input	
Input Voltage Range	162 VAC to 268 VAC (220V) 170 VAC to 280 VAC (230V) 177 VAC to 290 VAC (240V)
Input Frequency	50/60 Hz self-adaptive
Plug Type	Schuko
Output	
Output Voltage Range	220/230VAC ± 10%
Output Frequency	50/60 Hz ± 0.5 Hz self-adaptive
Transfer Time	≤ 10 ms
Waveform	Simulated Sine wave
Outlet Type	Schuko
Outlet Number	2
Battery	
Battery Type	12 V/9 Ah x 1, lead-acid battery
Recharge Time	4-6 hours recover to 90% capacity
Typical Backup Time	Run time at 100w: 20-25 min
Interface	
Communicate Ports	No
Protection	
Full Protection	Surge protection, Overload protection, Discharge protection, Short circuit protection
Indicator	
Display	LED indicator Line mode: Solid green led lighting Battery mode: Solid yellow led flash Fault mode: Solid red led lighting
Alarm	Battery mode: Sounding every 10 seconds. Low battery : Sounding every second. Over load : Sounding every 0.5 seconds. Fault: Continuously sounding.
General	
Operating Temperature	0 °C to 40 °C (32 °F to 104 °F)
Operating Humidity	0% to 90% (non-condensing)
Dimension	276.1 mm × 101 mm × 142 mm (10.9" × 3.98" × 5.59")
Weight	5.55kg

▪ Available Model

DS-UPS1000-R

▪ Dimension

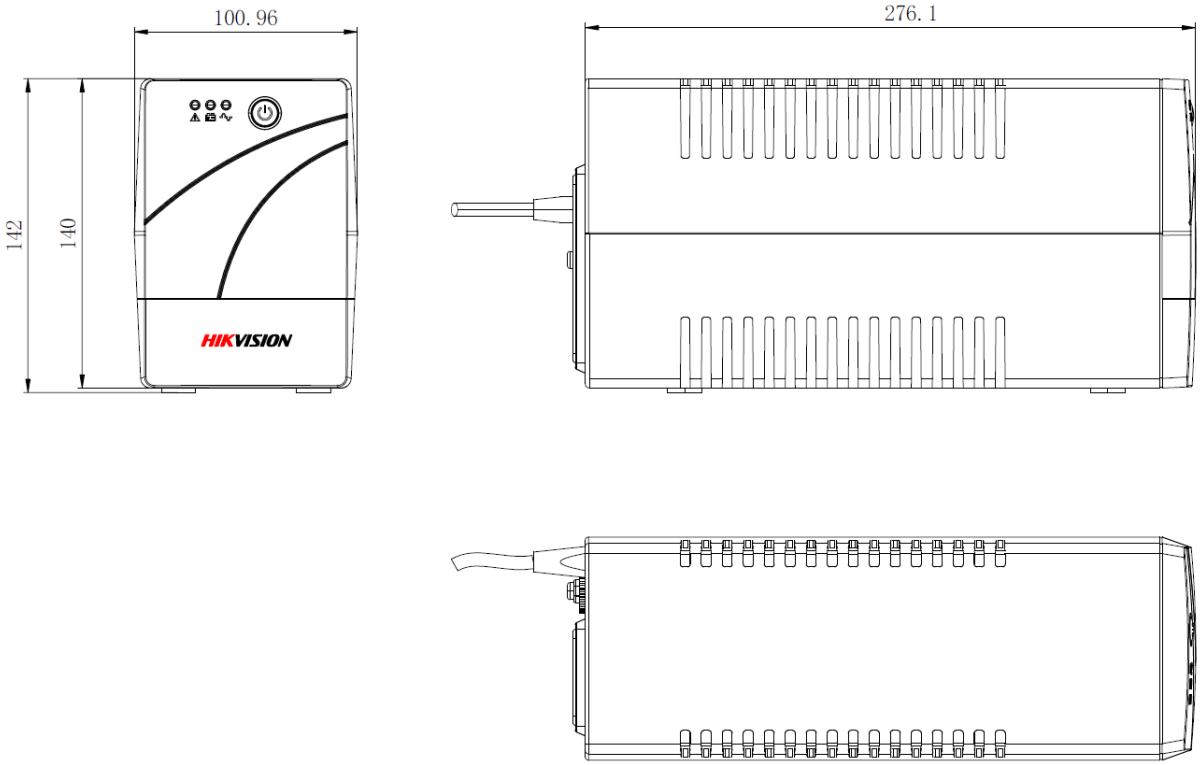
100.96
276.1
142
140
HIKVISION
Output
Input
Breaker

Headquarters
No.555 Qianmo Road, Binjiang District,
Hangzhou 310051, China
T +86-571-8807-5998
www.hikvision.com

Follow us on social media to get the latest product and solution information.

Hikvision HikvisionHQ HikvisionHQ Hikvision_Global Hikvision Corporate Channel hikvisionhq

© Hangzhou Hikvision Digital Technology Co., Ltd. Unless otherwise agreed, Hikvision makes no warranties, express or implied. We reserve the right to introduce modifications without notice.