DS-2TD8167-150ZC4F/W

Thermal & Optical Bi-spectrum Network Stable PTZ Camera





Hikvision DS-2TD8167-150ZC4F/W Thermal & Optical Bi-spectrum Network Stable PTZ equipped with built-in GPU which supports intelligent perimeter protection algorithm, can realize high-precision VCA detection and real-time alarm. It is applied to perimeter protection scenes, such as airport, railway, farm, large parking lot. The pre-alarm system helps you discover unexpected events immediately and protects your property.

- Perimeter protection function, based on intelligent algorithm: line crossing, intrusion, region entrance and exit
- Temperature exception alarm for fire prevention
- Fire detection algorithm, Smoke detection algorithm
- 640 × 512 (the resolution of output image is 1920 × 1080) resolution 17 μm, VOx UFPA, NETD ≤ 35 mK (25 °C, F# = 1.0)
- Image processing technology: Liner, histogram, and self-adaptive thermal AGC mode, DDE, 3D DNR
- High quality detector with 10 years guarantee
- Smart tracking: Panorama tracking, Event tracking and Multi-scene patrol tracking
- Smart tracking linkage: thermal view and optical view
- Thermal channel and optical channel supports EIS, conflicted with intelligent function
- Support vessel detection like dredger, fishing boat and ship flow detection

▪ Specification

Thermal Module	
Image Sensor	Vanadium Oxide Uncooled Focal Plane Arrays
Resolution	640 × 512 (the resolution of output image is 1920 × 1080)
Pixel Pitch	17 μm
Spectral Range	8 μm to 14 μm
NETD	Less than 35 mK (@25 ℃,F#=1.0)
Focal Length	30 to 150 mm
Focus Mode	Semi-auto & Manual
IFOV	0.57 to 0.11 mrad
Aperture	F0.8 to F1.2
Field of View	20.56° × 16.51° (H × V) to 4.15° × 3.32° (H × V)
Min. Focusing Distance	3m
Digital Zoom	×2, ×4, ×8
Optical Module	
Image Sensor	1/1.8" Progressive Scan CMOS
Resolution	2688 × 1520, 4 MP
Min. Illumination	Color: 0.0005 Lux @ (F1.5, AGC ON), B/W: 0.0001 Lux @ (F1.5, AGC ON)
Field of View	60° × 35.8° (H × V) to 1.2° × 0.7° (H × V)
Focal Length	6.7 to 360mm, 54X
Aperture (Range)	F1.36-F4.6
Focus Mode	Semi-auto/Manual
Shutter Speed	1s to 1/30,000s
WDR	120 dB
Digital Zoom	×2, ×4, ×8, ×16
Optical Defog	Yes
Image Effect	
Picture in Picture	Display partial image of thermal channel on the full screen of optical channel
Target Coloration	Supported in white hot and black hot mode
PTZ	
Movement Range	Pan: 360° Continuous Rotate; Tilt: From -45° to + 45° (auto flip)
Pan Speed	Configurable, From 0.01°/s to 40°/s, Preset Speed: 240°/s
Tilt Speed	Configurable, From 0.01°/s to 20°/s, Preset Speed: 200°/s
Proportional Zoom	Yes
Presets	300 in total, 273 are configurable.
Patrol Scan	8; Up to 32 Presets Per Patrol
Pattern Scan	4; More Than 10 Minutes Per Pattern
Power Off Memory	Yes
Park	Preset/Pattern Scan/Patrol Scan/Auto Scan/Tilt Scan/Random Scan/Frame Scan/Panorama Scan
PT Status	Turn On/Turn Off
Scheduled Task	Preset/Pattern Scan/Patrol Scan/Auto Scan/Tilt Scan/Random Scan/Frame Scan/Panorama Scan/Doom Reboot/Doom Adjust/Aux Output
Smart Function	
VCA	Support 4 VCA rule types (Line Crossing, Intrusion, Region Entrance, and Region Exiting), up to 10 scenes and 8 VCA rules for each scene

Temperature Measurement	Support 3 temperature measurement rule types, 273 presets as scene, 21 rules of each scene (10 points, 10 areas, and 1 line)
Temperature Range	-20 °C to 150 °C (-4 °F to 302 °F)
Temperature Accuracy	± 8 °C (±14.4 °F)
Fire Detection	Dynamic fire point detection, up to 10 fire points detectable.
Video and Audio	
Main Stream	Optical channel 50 Hz:25 fps (2688 × 1520, 1920 × 1080, 1280 × 960, 1280 × 720) 60 Hz: 30 fps (2688 × 1520, 1920 × 1080, 1280 × 960, 1280 × 720) Thermal channel 50 fps (1920 × 1080, 1280 × 960, 1280 × 720, 704 × 576, 640 × 480, 384 × 288)
Sub-stream	Optical channel 50 Hz:25 fps (704 × 576, 352 × 288) 60 Hz: 30 fps (704 × 576, 352 × 288) Thermal channel 50 fps (704 × 576, 640 × 480, 384 × 288)
Video Compression	Main stream: H.265+/H.265/H.264+/ H.264 Sub-stream: H.265/H.264/MJPEG
Audio Compression	G .711u/G.711a/G.722.1/MP2L2/G.726/PCM
Video and Image	
Color Palettes	17 types (White hot, Black hot, Fusion 1, Rainbow, Fusion 2, Ironbow 1, Ironbow 2, Sepia, Color 1, Color 2, Ice fire, Rain, Red hot, Green hot, Dark blue, Winter, Summer)
Network	
Protocols	IPv4/IPv6, HTTP, HTTPS, 802.1x, Qos, FTP, SMTP, UPnP, SNMP, DNS, DDNS, NTP, RTSP, RTCP, RTP, TCP, UDP, IGMP, ICMP, DHCP, PPPoE, SRTP
Network Storage	MicroSD/SDHC/SDXC card (up to 256 G) local storage, and NAS (NFS, SMB/CIFS), auto network replenishment (ANR)
API	ISAPI, HIKVISION SDK, third-party management platform, ONVIF (Profile S, Profile G, Profile T)
Simultaneous Live View	Up to 20 channels
User/Host level	Up to 32 users, 3 levels: Administrator, Operator, User
Security	User authentication (ID and password), MAC address binding, HTTPS encryption, IEEE 802.1x access control, IP address filtering
Client	iVMS-4200, Hik-Connect
Web Browser	Live view (plug-in allowed) : Internet Explorer 11 Live view (plug-in free) : Chrome 57.0 +, Firefox 52.0 + Local service : Chrome 57.0+, Firefox 52.0 +
Interface	
Alarm Input	7-ch inputs (0-5 VDC)
Alarm Output	2-ch relay outputs, alarm response actions configurable
Alarm Action	Preset/Patrol Scan/Pattern Scan/SD Card Record/Relay Output/Smart capture/FTP upload/Email linkage
Audio Input	1, 3.5 mm Mic in/Line in interface. Line input: 2 - 2.4 V [p-p], output impedance: 1 KΩ ± 10%
Audio Output	Linear Level; Impedance: 600 Ω

Communication Interface	1, RJ45 10 M/100 M Self-adaptive Ethernet interface. 1, RS-485 interface
Analog Output	1.0 V [p-p]/75 Ω, BNC for thermal channel
General	
Menu Language	32 languages English, Russian, Estonian, Bulgarian, Hungarian, Greek, German, Italian, Czech, Slovak, French, Polish, Dutch, Portuguese, Spanish, Romanian, Danish, Swedish, Norwegian, Finnish, Croatian, Slovenian, Serbian, Turkish, Korean, Traditional Chinese, Thai, Vietnamese, Japanese, Latvian, Lithuanian, Portuguese (Brazil)
Power Supply	48 VDC ± 20%, two-core terminal block
Power Consumption	Basic: < 190W; Max: < 270W (Heater on)
Working Temperature/Humidity	From -40°C to 65°C (-40°F to 149°F); Humidity: 95% or Less
Wiper	Yes
Protection Level	IP66 Standard; TVS 6000V Lightning Protection, Surge Protection and Voltage Transient Protection
Dimensions	559 mm × 379 mm × 646 mm (22.0 " × 14.9 " × 25.4 ")
Weight	Approx. 60kg (132.3 lb)
Detection Range Table	
VCA Range for Humans	1050 m
VCA Range for Vehicles	3150 m
Approval	
EMC	CE-EMC (EN 55032: 2015, EN 61000-3-2:2019, EN 61000-3-3: 2013+A1:2019, EN50130-4: 2011+A1: 2014); RCM (AS/NZS CISPR 32: 2015); IC (ICES-003: Issue 7)
Safety	CB: IEC 62368-1: 2014+A11; CE-LVD: EN 62368-1: 2014/A11: 2017; BIS: IS 13252 (Part 1): 2010/ IEC 60950-1: 2005 FCC: CFR 47 FCC Part 15 subpart B
Environment	CE-RoHS：2011/65/EU, Reach：Regulation(EC) No 1907/2006
Protection	IP66: IEC 60529-2013

▪ Range Table

**The table is only for reference and the performance may vary according to different environment.*

VCA Range (Vehicles: 1.4 × 4.0 m)	VCA Range (Humans: 1.8 × 0.5 m)	Temperature Measurement (Object: 0.2 × 0.2 m)	Temperature Measurement (Object: 0.5 × 0.5 m)	Fire Detection (Object: 1 × 1 m)	Smoke Detection (Object: 5 × 5m))
3150 m	1050 m	352 m	862 m	4412 m	6000 m

▪ DORI

**The table is only for reference and the performance may vary according to different environment.*

**The optimal human detection, recognition, and identification distances are calculated according to Johnson's Criteria.*

Recognition Range: In order to classify the object (animal, human, vehicle, etc.), the image must have at least 6 pixels across its critical dimension.

Identification Range: In order to identify the object and describe it in details, the critical dimension must have be least 12 pixels across



Detection Range (Vehicles: 1.4 × 4.0 m)	Detection Range (Humans: 1.8 × 0.5 m)	Recognition Range (Vehicles: 1.4 × 4.0 m)	Recognition Range (Humans: 1.8 × 0.5 m)	Identification Range (Vehicles: 1.4 × 4.0 m)	Identification Range (Humans: 1.8 × 0.5 m)
13529 m	4412 m	3382 m	1103 m	1691 m	551 m

▪ Typical Application

Hikvision products are classified into three levels according to their anti-corrosion performance. Refer to the following description to choose for your using environment.

No products could be used under HYDROGEN FLUORIDE environment. This model has MODERATE PROTECTION.

Level	Description
Top-level Protection	Hikvision products at this level are equipped for use in areas where professional anti-corrosion protection is a must. Usually it is used in salt-spray and sulfur dioxide (with a concentration volume ratio of less than 0.67%) environment, such as chemical plants and coastal lines.
Moderate Protection	Hikvision products at this level are equipped for use in areas with moderate anti-corrosion demands. Typical application scenarios include coastal areas about 2 kilometers (1.24 miles) away from coastlines, as well as areas affected by acid rain.
No Specific Protection	Hikvision products at this level are equipped for use in areas where no specific anti-corrosion protection is needed.

▪ Available Model

DS-2TD8167-150ZC4F/W

DS-2TD8167-150ZC4F/W(TSS)

▪ Dimension

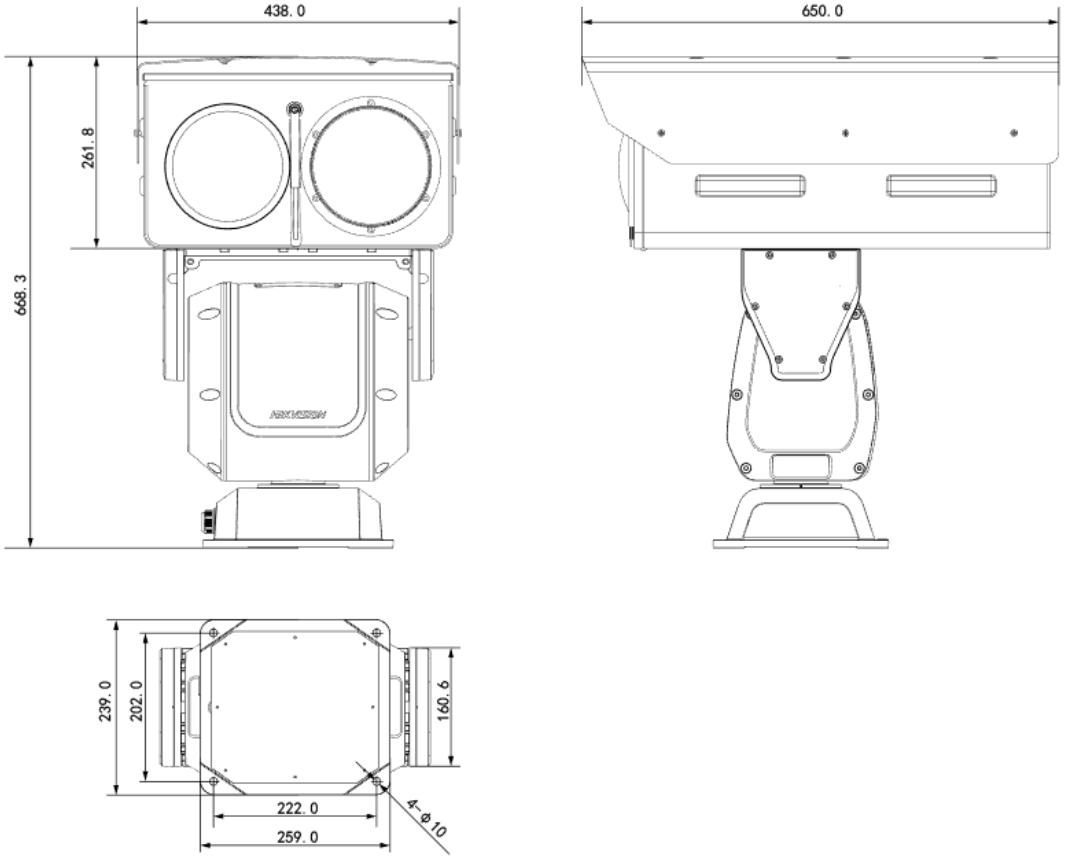
438.0
650.0
261.8
668.3
239.0
202.0
160.6
222.0
259.0
4-ϕ10

See Far, Go Further

www.hikvision.com
support@hikvision.com

© Hangzhou Hikvision Digital Technology Co., Ltd. Unless otherwise agreed, Hikvision makes no warranties, express or implied. We reserve the right to introduce modifications without notice.

HIKVISION®