HM-TD8168-190ZK4FL/G0/T2

Thermal & Optical Bi-spectrum Network Stable PTZ Camera





HIKMICRO Anti-corrosion Thermal Optical Bi-spectrum Network Stable Positioning System is applied to perimeter protection and fire-prevention purposes in scenes such as port, dock, island, aquafarm. The coating technology can meet the use requirements in anti-corrosion environment.

- 640 × 512 resolution 12 μm, NETD < 25 mK (25 ℃, F# = 1.0)
- Perimeter protection function, based on intelligent algorithm: line crossing, intrusion, region entrance and exit
- Temperature exception alarm for fire prevention
- Fire detection and smoke detection algorithm
- Added one fixed lens overlaid on optical PTZ channel for wide-angle monitoring
- High quality detector with 10 years guarantee
- NEMA-4X Standard, Anti-corrosion coating

▪ Specification

Thermal Module	
Image Sensor	VOx Uncooled Focal Plane Arrays
Resolution	640 × 512
Pixel Interval	12 μm
Response Waveband	8 μm to 14 μm
NETD	Less than 25 mK (@25°C,F#=1.0)
Focal Length	19-190 mm
Focus Mode	Semi-auto & Manual
IFOV	0.67-0.067 mrad
Aperture	F0.76-1.2
Field of View	24.6°(H)*19.7°(V)-2.4°(H)*2.0°(V)
Min. Focusing Distance	3m
Digital Zoom	x2, x4, x8
Optical Module	
Image Sensor	1/1.8" Progressive Scan CMOS
Resolution	2688 × 1520, 4 MP
Min. Illumination	Fixed Lens：Color: 0.0005 Lux @（F1.0，AGC ON） PTZ Lens：Color: 0.002 Lux @(F3.05, AGC ON), B/W: 0.0002 Lux@ (F3.05, AGC ON)
Field of View	Fixed Lens：89.46°(H) 47.92°(V) PTZ Lens：29.89°(H) 17.3°(V)-0.42°(H)0.23°(V)
Focal Length	Fixed Lens: 4mm PTZ Lens: 10-1100mm
Aperture (Range)	Fixed Lens：F1.0 PTZ Lens：F3-8.7
Shutter Speed	1/25 s s to 1/30,000 s
WDR	120 dB
Digital Zoom	x2, x4, x8, x16
Optical Defog	PTZ lens support
Focus Mode	PTZ lens：semi-auto/manual
Image Effect	
Picture in Picture	Display partial image of one channel on the full screen of the other channel
Target Coloration	Yes. Supported in white hot and black hot mode.
Image Stabilization	Thermal channel supports EIS. Optical PTZ lens supports OIS.
PTZ	
Movement Range	Pan: 360° Continuous Rotate; Tilt: From -45° to + 45° (auto flip)
Pan Speed	Configurable, From 0.03°/s to 40°/s
Tilt Speed	Configurable, From 0.02°/s to 15°/s
Proportional Zoom	Yes
Presets	300 in total
Patrol Scan	8; Up to 32 Presets Per Patrol
Pattern Scan	4; More Than 10 Minutes Per Pattern

Power Off Memory	Yes
Park	Preset/Pattern Scan/Patrol Scan/Auto Scan/Tilt Scan/Random Scan/Frame Scan/Panorama Scan
PT Status	Turn On/Turn Off
Scheduled Task	Preset/Pattern Scan/Patrol Scan/Auto Scan/Tilt Scan/Random Scan/Frame Scan/Panorama Scan/Doom Reboot/Doom Adjust/Aux Output
Illuminator	
Laser Distance	Up to 3000m
Smart Function	
VCA	VCA Support 4 VCA rule types (Line Crossing, Intrusion, Region Entrance, and Region Exiting), up to 50 scenes and 8 VCA rules for each scene
Temperature Measurement	Support 3 temperature measurement rule types, 273 presets as scene, 21 rules of each scene (21 points, 21 areas, and 1 line)
Temperature Range	-20 °C to 150 °C (-4 °F to 302 °F)
Temperature Accuracy	± 8 °C (±14.4 °F)
Fire Detection	Dynamic fire point detection, up to 10 fire points detectable.
Smoke Detection	Up to 16km detection ability with 5m*5m smoke
Video and Audio	
Main Stream	Optical channel 50 Hz: 25 fps (2688 × 1520 , 1920 × 1080, 1280 × 960, 1280 × 720) 60 Hz: 30 fps (2688 × 1520 , 1920 × 1080, 1280 × 960, 1280 × 720) Thermal channel 50 fps (1920 × 1080, 1280 × 960, 1280 × 720, 704 x 576, 640 x 512, 384 x 288)
Sub-stream	Optical channel 50 Hz: 25fps (704 × 576, 352 × 288) 60 Hz: 30 fps (704 × 576, 352 × 288) Thermal channel 50 fps (704 × 576, 640 × 512, 384 × 288)
Video Compression	Main stream: H.265/ H.264 Sub-stream: H.265/H.264/MJPEG
Audio Compression	G722.1/G .711ulaw/G.711alaw/MP2L2/G.726/AAC/PCM
Video and Image	
Color Palettes	15 palettes (White hot, Black hot, Fusion 1, Rainbow, Fusion 2, Ironbow 1, Ironbow 2, Sepia, Color 1, Color 2, Icefire, Rain, Red hot,Green hot, Dark blue)
Network	
Protocols	IPv4/IPv6, HTTP, HTTPS, 802.1x, Qos, FTP, SMTP, UPnP, SNMP, DNS, DDNS, NTP, RTSP, RTCP, RTP, TCP, UDP, IGMP, ICMP, DHCP, PPPoE
Network Storage	MicroSD/SDHC/SDXC card (up to 512 G) local storage, and NAS (NFS, SMB/CIFS), auto network replenishment (ANR)
API	ISAPI, HIKVISION SDK, third-party management platform, ONVIF (Profile S, Profile G, Profile T , Profile M)
Simultaneous Live View	Up to 20 channels
User/Host level	Up to 32 users, 3 levels: Administrator, Operator, User
Security	User authentication (ID and PW), MAC address binding, HTTPS encryption, IEEE 802.1x access control, IP address filtering

Client	iVMS-4200, Hik-Connect
Web Browser	Live view (plug-in allowed) : Internet Explorer 11 Live view (plug-in free) :Chrome 91+、Firefox 88+、Safari 13+
Interface	
Alarm Input	7-ch inputs (0-5 VDC)
Alarm Output	2-ch relay outputs, alarm response actions configurable
Alarm Action	Preset/Patrol Scan/Pattern Scan/SD Card Record/Relay Output/Smart capture/FTP upload/Email linkage
Audio Input	LINE_IN Input/MIC Input; Peak: From 2 to 2.4V[p-p]; Output Impedance: 1KΩ±10%
Audio Output	Linear Level; Impedance: 600 Ω
Communication Interface	1, RJ45 10 M/100 M Self-adaptive Ethernet interface. 1, RS-485 interface
Analog Video Output	1.0 V [p-p]/75 Ω, BNC for thermal channel
General	
Power Supply	48 VDC ± 20%, two-core terminal block
Power Consumption	Basic: < 190W; Max: < 270W (Heater on)
Work Temperature/Humidity	From -40°C to 70°C (-40°F to 158°F); Humidity: 95% or Less
Wiper	Yes
Protection Level	IP67 Standard TVS 6000 V lightning protection, surge protection, voltage transient protection
Dimension	674 mm × 543 mm × 665 mm (26.5 " × 21.4 " × 26.2 ")
Weight	Approx. 60kg (132.3 lb)
Detection Range Table	
VCA Range for Humans	2470m
VCA Range for Vehicles	5700m
Approval	
EMC	CE-EMC (EN 55032: 2015, EN 61000-3-2:2019, EN 61000-3-3: 2013+A1:2019, EN50130-4: 2011+A1: 2014); RCM (AS/NZS CISPR 32: 2015); IC (ICES-003: Issue 7)
Safety	CB: IEC 62368-1: 2014+A11; CE-LVD: EN 62368-1: 2014/A11: 2017;
Environment	CE-RoHS：2011/65/EU, WEEE: 2012/19/EU, Reach：Regulation(EC) No 1907/2006
Protection	IP67: IEC 60529-2013
Other	NEMA 4X (NEMA 250-2018) C5-ISO 12944-6:1998 C5 Medium & ISO 7253:1996 & ISO 6270-2:2017

▪ Range Table

The table is only for reference and the performance may vary according to different environment.

VCA Range (Vehicles: 1.4 × 4.0 m)	VCA Range (Humans: 1.8 × 0.5 m)	VCA Range (Vessels: 10 × 5 m)	Temperature Measurement (Object: 0.2 ×	Fire Detection (Object: 1 × 1 m)	Smoke Detection (Object: 5 × 5 m)

			0.2 m)		
5700 m	2470 m	7600 m	633.3 m	7917 m	16000m

▪ DORI

**The table is only for reference and the performance may vary according to different environment.*

**The optimal human detection, recognition, and identification distances are calculated according to Johnson's Criteria.*

Detection Range: In order to distinguish an object from the background, the object must be covered by 1.5 or more pixels.

Recognition Range: In order to classify the object (animal, human, vehicle, etc.), the object must be covered by 6 or more pixels.

Identification Range: In order to identify the object and describe it in details, the object must be covered by 12 or more pixels.

Detection Range (Vehicles: 1.4 × 4.0 m)	**Detection Range (Humans: 1.8 × 0.5 m)**	**Recognition Range (Vehicles: 1.4 × 4.0 m)**	**Recognition Range (Humans: 1.8 × 0.5 m)**	**Identification Range (Vehicles: 1.4 × 4.0 m)**	**Identification Range (Humans: 1.8 × 0.5 m)**
24278m	7917m	6069m	1979m	3035m	990m

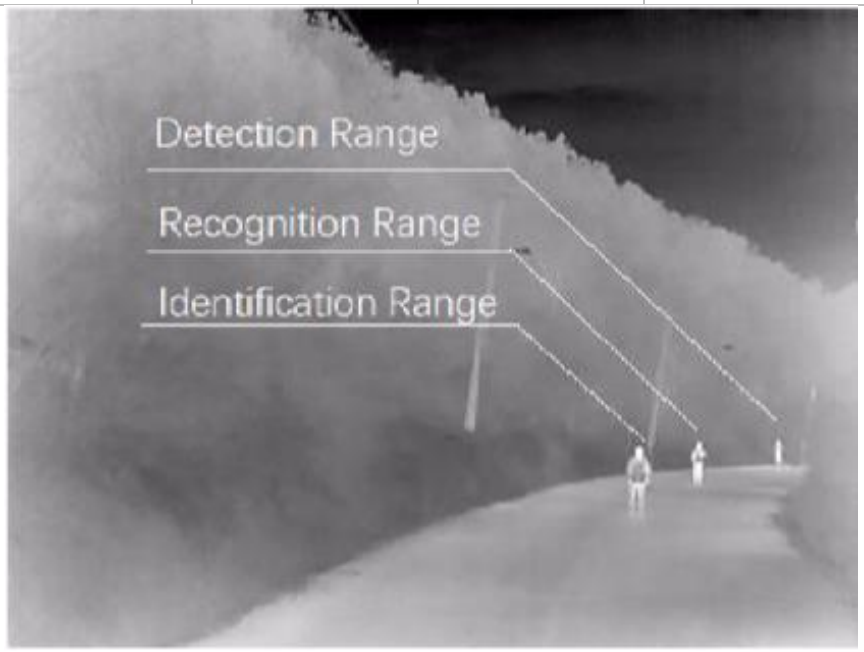

▪ Available Model

HM-TD8168-190ZK4FL/G0/T2

▪ Dimension

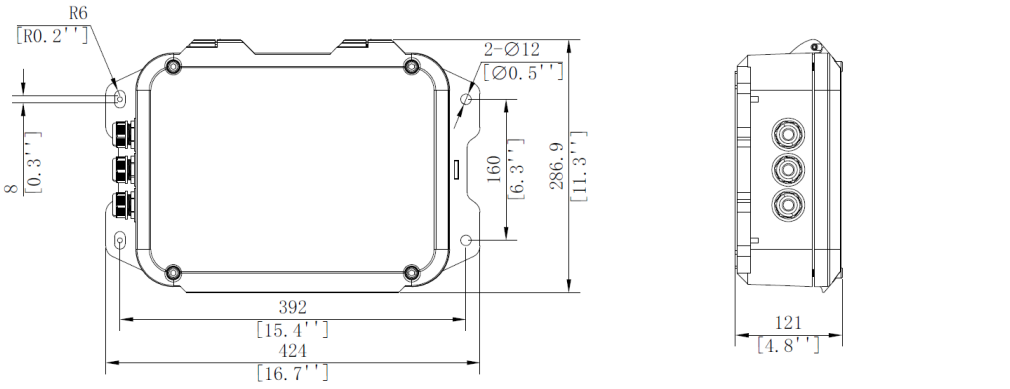

Unit:mm[Inch]

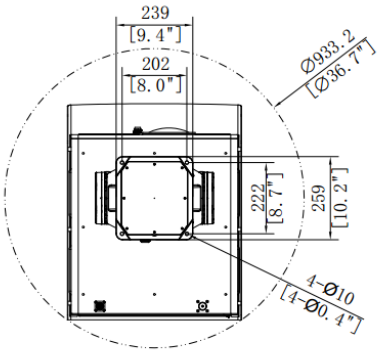
239
[9.4"]
202
[8.0"]
Ø933.2
[Ø36.7"]
222
[8.7"]
259
[10.2"]
4-Ø10
[4-Ø0.4"]

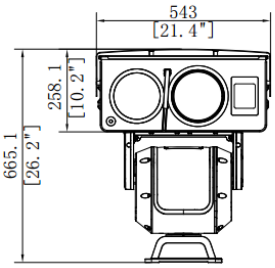
543
[21.4"]
258.1
[10.2"]
665.1
[26.2"]

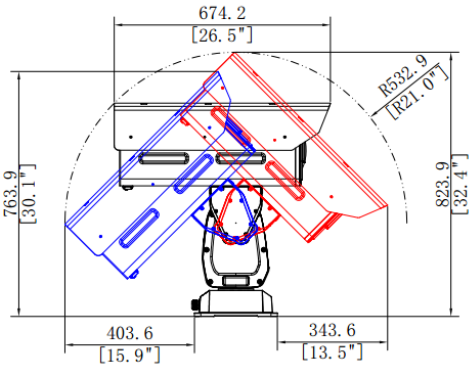
674.2
[26.5"]
R532.9
[R21.0"]
763.9
[30.1"]
823.9
[32.4"]
403.6
[15.9"]
343.6
[13.5"]

Unit:mm[Inch]

See Far, Go Further

www.hikvision.com
support@hikvision.com

© Hangzhou Hikvision Digital Technology Co., Ltd. Unless otherwise agreed, Hikvision makes no warranties, express or implied. We reserve the right to introduce modifications without notice.

HIKVISION®