DS-2CD6825G0/C-IV(S)
Dual-Lens People Counting Network Camera



- High quality imaging with 4 MP resolution
- Efficient H.265+ compression technology
- Clear imaging against strong back light due to 120 dB true WDR technology
- 3D DNR technology delivers clean and sharp images
- -S: audio and alarm interface available
- Water and dust resistant (IP67)

▪ Specification

Camera	
Image Sensor	1/2.7" Progressive Scan CMOS
Max. Resolution	2560 × 1440
Min. Illumination	Color: 0.0176 Lux @ (F2.25, AGC ON), B/W: 0.0035 Lux @ (F2.25, AGC ON), B/W: 0 Lux with IR
Shutter Time	1/25 s to 1/100,000 s
Day & Night	IR cut filter
Lens	
Lens Type	Fixed focal lens, 2 mm
Focal Length & FOV	2 mm, horizontal FOV 104.5°, vertical FOV 70.5°, diagonal FOV 112°
Lens Mount	M12
Aperture	F2.25
Illuminator	
Supplement Light Type	IR
Supplement Light Range	Up to 6 m
IR Wavelength	850 nm
Video	
Main Stream	50 Hz: 25 fps (2560 × 1440, 1920 × 1080, 1280 × 720) 60 Hz: 30 fps (2560 × 1440, 1920 × 1080, 1280 × 720)
Sub-Stream	50 Hz: 25 fps (704 × 576, 640 × 480) 60 Hz: 30 fps (704 × 480, 640 × 480)
Video Compression	Main stream: H.265+/H.265/H.264+/H.264, Sub-stream: H.265/H.264/MJPEG
Video Bit Rate	32 Kbps to 8 Mbps
H.264 Type	Baseline Profile, Main Profile, High Profile
H.265 Type	Main Profile
Scalable Video Coding (SVC)	H.264 and H.265 encoding
Region of Interest (ROI)	4 fixed region(s) for main stream and sub-stream
Audio	
Audio Type	-S: Mono sound
Audio Compression	-S: G.711/G.722.1/G.726/MP2L2/PCM/MP3/AAC-LC
Audio Bit Rate	-S: 64 Kbps (G.711ulaw/G.711alaw)/16 Kbps (G.722.1)/16 Kbps (G.726)/32 to 192 Kbps (MP2L2)/8 to 320 Kbps (MP3)/16 to 64 Kbps (AAC-LC)
Audio Sampling Rate	-S: 8 kHz/16 kHz/32 kHz/44.1 kHz/48 kHz
Environment Noise Filtering	-S: Yes
Network	
Protocols	TCP/IP, ICMP, HTTP, HTTPS, FTP, DHCP, DNS, DDNS, RTP, RTSP, RTCP, PPPoE, NTP, UPnP, SMTP, SNMP, IGMP, 802.1X, QoS, IPv6, UDP, Bonjour, SSL/TLS
Simultaneous Live View	Up to 20 channels
API	Open Network Video Interface (Profile S, Profile G), ISAPI, SDK
User/Host	Up to 32 users 3 user levels: administrator, operator, and user

Security	Password protection, complicated password, HTTPS encryption, 802.1X authentication (EAP-TLS, EAP-LEAP, EAP-MD5), watermark, IP address filter, basic and digest authentication for HTTP/HTTPS, WSSE and digest authentication for Open Network Video Interface, RTP/RTSP over HTTPS, control timeout settings, security audit log, TLS 1.3, host authentication (MAC address)
Client	iVMS-4200,Hik-Connect
Web Browser	Plug-in required live view: IE 10, IE 11, Plug-in free live view: Chrome 57.0+, Firefox 52.0+, Local service: Chrome 57.0+, Firefox 52.0+, Safari12+
Image	
Image Settings	Saturation,brightness,contrast,sharpness,adjustable by client software or web browser
Day/Night Switch	Day,Night,Auto,Schedule,Alarm Trigger (-S)
Wide Dynamic Range (WDR)	120 dB
Image Enhancement	BLC,HLC,3D DNR,defog
Picture Overlay	LOGO picture can be overlaid on video with 128 × 128 24 bit bmp format.
Interface	
Ethernet Interface	1 RJ45 10 M/100 M self-adaptive Ethernet port
On-Board Storage	Built-in eMMC storage, up to 8 GB for people counting data
Built-in Microphone	Yes
Audio	-S: 1 input (line in), two-core terminal block, max. input amplitude: 3.3 Vpp, input impedance: 4.7 KΩ, interface type: non-equilibrium, -S: 1 output (line out), two-core terminal block, max. output amplitude: 3.3 Vpp, output impedance: 100 Ω, interface type: non-equilibrium
Alarm	-S: 1 input(s), 1 output(s) (max. 24 VDC/24 VAC, 1 A)
RS-485	-S: 1 RS-485 (Half duplex, HIKVISION, Pelco-P, Pelco-D, self-adaptive)
Event	
Basic Event	Motion detection,video tampering alarm,network disconnected,IP address conflict,illegal login,HDD full,HDD error
Linkage	Upload to FTP/NAS/memory card,notify surveillance center,send email,trigger recording,trigger capture
Deep Learning Function	
People Counting	Counts people entering and exiting separately Supports real-time uploading and uploading by statistic cycle Sends email reports on daily, weekly, monthly or annually basis Supports target filtering by height
General	
Power	12 VDC ± 20%, 0.58 A, max. 7.0 W,Ø5.5 mm coaxial power plug,reverse polarity protection, PoE: 802.3af, Type 1, Class 3, 36 V to 57 V, 0.24 A to 0.15 A, max. 8.5 W
Material	Front cover: plastic, camera body: metal
Dimension	168 mm × 61 mm × 41 mm (6.6" × 2.4" × 1.6")
Package Dimension	235 mm × 120 mm × 125 mm (9.2" × 4.7" × 4.9")
Weight	Approx. 435 g (1 lb.)
With Package Weight	Approx. 835 g (1.6 lb.)
Storage Conditions	-30 °C to 60 °C (-22 °F to 144 °F). Humidity 95% or less (non-condensing)

Startup and Operating Conditions	-30 °C to 60 °C (-22 °F to 140 °F). Humidity 95% or less (non-condensing)
Language	32 languages: English, Russian, Estonian, Bulgarian, Hungarian, Greek, German, Italian, Czech, Slovak, French, Polish, Dutch, Portuguese, Spanish, Romanian, Danish, Swedish, Norwegian, Finnish, Croatian, Slovenian, Serbian, Turkish, Korean, Traditional Chinese, Thai, Vietnamese, Japanese, Latvian, Lithuanian, Portuguese (Brazil)
General Function	Heartbeat,anti-flicker,mirror,password protection
Approval	
EMC	FCC: 47 CFR Part 15, Subpart B, IC: ICES-003: Issue 7, KC: KN32: 2015, KN35: 2015, CE-EMC: EN 55032: 2015, EN 61000-3-2:2019, EN 61000-3-3: 2013+A1:2019, EN 50130-4: 2011 +A1: 2014, RCM: AS/NZS 60950.1:2003 + Am1, Am2 and Am3,AS/NZS CISPR 32:2015
Safety	UL: UL 62368-1, CB: IEC 62368-1: 2014+A11, CE-LVD: EN 62368-1: 2014/A11: 2017, BIS: IS 13252 (Part 1): 2010/IEC 60950-1: 2005, LOA: IEC/EN 60950-1
Environment	CE-RoHS: 2011/65/EU+2015/863
Protection	IP67: IEC 60529-2013

▪ Typical Application

Hikvision products are classified into three levels according to their anti-corrosion performance. Refer to the following description to choose for your using environment.

This model has NO SPECIFIC PROTECTION.

Level	Description
Top-level protection	Hikvision products at this level are equipped for use in areas where professional anti-corrosion protection is a must. Typical application scenarios include coastlines, docks, chemical plants, and more.
Moderate protection	Hikvision products at this level are equipped for use in areas with moderate anti-corrosion demands. Typical application scenarios include coastal areas about 2 kilometers (1.24 miles) away from coastlines, as well as areas affected by acid rain.
No specific protection	Hikvision products at this level are equipped for use in areas where no specific anti-corrosion protection is needed.

▪ Installation Recommendation

Focal Length (mm)	Mounting Height (m)	Max. Detection Span (m)
2	2.1	0.95
2	2.6	2.15
2	3.1	3.34
2	3.6	4.53

2	4.1	5.72
2	4.7	5.36
2	5.1	6.08
2	5.6	6.97
2	6	7.69

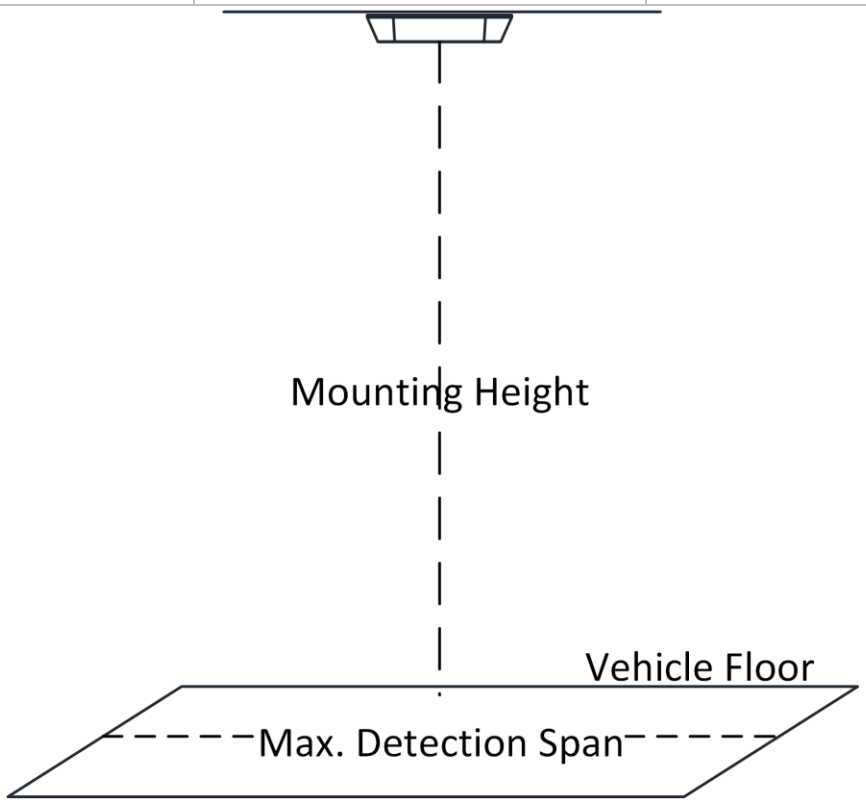

▪ Available Model

DS-2CD6825G0/C-IVS(2mm)(B)

DS-2CD6825G0/C-IV(2mm)(B)

DS-2CD6825G0/C-IVS(2mm)(B)(USA-STD)

DS-2CD6825G0/C-IVS(2mm)(HIK COL)

▪ Dimension

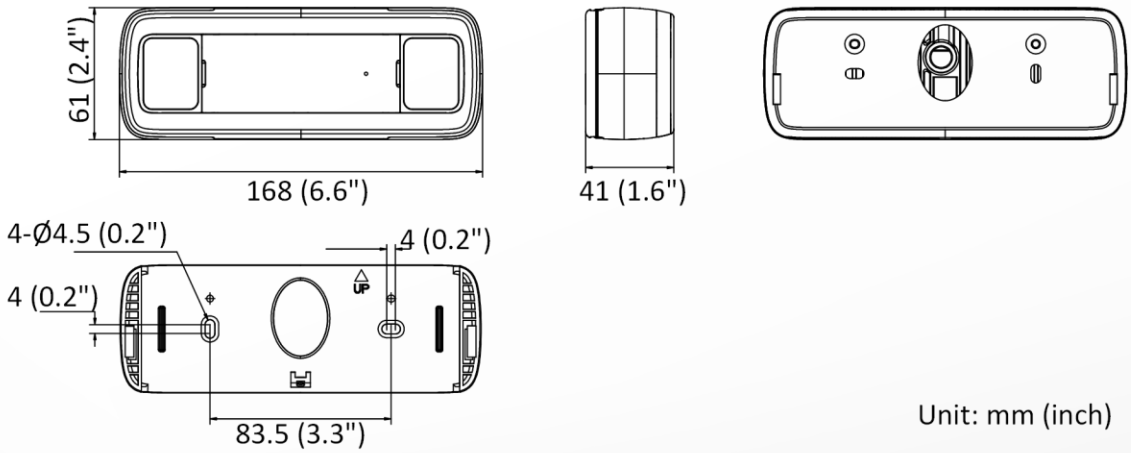

Unit: mm (inch)

▪ Accessory

▪ Optional

DS-1227ZJ-P4	DS-2272ZJ-KL	DS-1297ZJ-ES
		

- **Installation Methods**

In-Ceiling Mounting DS-1227ZJ-P4	Wall Mounting DS-2272ZJ-KL	Pendant Mounting DS-1297ZJ-ES
		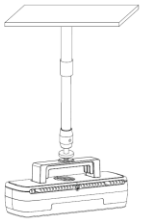

See Far, Go Further

www.hikvision.com
support@hikvision.com

© Hangzhou Hikvision Digital Technology Co., Ltd. Unless otherwise agreed, Hikvision makes no warranties, express or implied. We reserve the right to introduce modifications without notice.

HIKVISION®