DS-2CD1123G2-I(T)
2 MP MD 2.0 Fixed Dome Network Camera





- High quality imaging with 2 MP resolution
- Support Human and Vehicle Detection
- Water and dust resistant (IP67) and vandal resistant (IK10)
- Efficient H.265+ compression technology
- EXIR 2.0: advanced infrared technology with long IR range

▪ Specification

Camera	
Image Sensor	1/2.9" Progressive Scan CMOS
Max. Resolution	1920 × 1080
Shutter Time	1/3 s to 1/100,000 s
Min. Illumination	Color: 0.01 Lux @ (F2.0, AGC ON), B/W: 0 Lux with IR
Day & Night	IR cut filter
Angle Adjustment	Pan: 0° to 355°, tilt: 0° to 75°
Lens	
Lens Type	Fixed focal lens, 2.8 and 4 mm optional
Focal Length & FOV	2.8 mm, horizontal FOV 104°, vertical FOV 58°, diagonal FOV 123° 4 mm, horizontal FOV 81°, vertical FOV 43°, diagonal FOV 96°
Lens Mount	M12
Iris Type	Fixed
Aperture	F2.0
DORI	
DORI	2.8 mm, D: 42 m, O: 16 m, R: 8 m, I: 4 m 4 mm, D: 57 m, O: 22 m, R: 11 m, I: 5 m
Illuminator	
Supplement Light Type	IR
Supplement Light Range	Up to 30 m
Smart Supplement Light	Yes
IR Wavelength	850 nm
Video	
Main Stream	50 Hz: 25 fps (1920 × 1080, 1280 × 720) 60 Hz: 30 fps (1920 × 1080, 1280 × 720)
Sub-Stream	50 Hz: 25 fps (640 × 480, 640 × 360) 60 Hz: 30 fps (640 × 480, 640 × 360)
Video Compression	Main stream: H.265+/H.265/H.264+/H.264 Sub-stream: H.265/H.264/MJPEG
Video Bit Rate	32 Kbps to 8 Mbps
H.264 Type	Baseline Profile/Main Profile/High Profile
H.265 Type	Main Profile
Bit Rate Control	CBR/VBR
Region of Interest (ROI)	1 fixed region for main stream
Network	
Security	Password protection, complicated password, watermark, basic and digest authentication for HTTP, WSSE and digest authentication for Open Network Video Interface, security audit log, host authentication (MAC address)
Simultaneous Live View	Up to 6 channels
API	Open Network Video Interface (Profile S, Profile T), ISAPI, SDK
Protocols	TCP/IP, ICMP, DHCP, DNS, HTTP, RTP, RTSP, NTP, IGMP, IPv6, UDP, QoS, FTP, SMTP
User/Host	Up to 32 users 3 user levels: administrator, operator, and user
Client	iVMS-4200, Hik-Connect

Web Browser	Plug-in required live view: IE 10, IE 11 Local service: Chrome 57.0+, Firefox 52.0+
Image	
Wide Dynamic Range (WDR)	Digital WDR
SNR	≥ 52 dB
Day/Night Switch	Day, Night, Auto, Schedule
Image Enhancement	BLC, HLC, 3D DNR
Image Settings	Rotate mode, saturation, brightness, contrast, sharpness, gain, white balance, adjustable by client software or web browser
Privacy Mask	4 programmable polygon privacy masks
Interface	
Ethernet Interface	1 RJ45 10 M/100 M self-adaptive Ethernet port
Event	
Basic Event	Motion detection (support alarm triggering by specified target types (human and vehicle)), video tampering alarm, exception
Linkage	Upload to FTP, send email, notify surveillance center, trigger capture
General	
Power	12 VDC ± 25%, 0.4 A, max. 5 W, Ø5.5 mm coaxial power plug PoE: 802.3af, Class 3, 36 V to 57 V, 0.2 A to 0.15 A, max. 6.5 W
Material	Metal & Plastic
Dimension	Ø110.8 mm × 84.7 mm (Ø4.4" × 3.3")
Package Dimension	134 mm × 134 mm × 108 mm (5.3" × 5.3" × 4.3")
Weight	Approx. 520 g (1.1 lb.)
With Package Weight	Approx. 720 g (1.6 lb.)
Storage Conditions	-30 °C to 60 °C (-22 °F to 140 °F). Humidity 95% or less (non-condensing)
Startup and Operating Conditions	-30 °C to 60 °C (-22 °F to 140 °F). Humidity 95% or less (non-condensing)
Language	English, Ukrainian
General Function	Heartbeat, anti-flicker, mirror, password protection, password reset via email
Approval	
EMC	FCC: 47 CFR Part 15, Subpart B CE-EMC: EN 55032: 2015, EN 61000-3-2:2019, EN 61000-3-3: 2013+A1:2019, EN 50130-4: 2011 +A1: 2014 RCM: AS/NZS CISPR 32: 2015 IC: ICES-003: Issue 7 KC: KN32: 2015, KN35: 2015
Safety	UL: UL 62368-1 CB: IEC 62368-1: 2014+A11 CE-LVD: EN 62368-1: 2014/A11: 2017 BIS: IS 13252 (Part 1): 2010/IEC 60950-1: 2005
Environment	CE-RoHS: 2011/65/EU WEEE: 2012/19/EU Reach: Regulation (EC) No 1907/2006
Protection	IP67: IEC 60529-2013, IK10: IEC 62262: 2002

▪ Typical Application

Hikvision products are classified into three levels according to their anti-corrosion performance. Refer to the following description to choose for your using environment.

This model has NO SPECIFIC PROTECTION.

Level	Description
Top-level protection	Hikvision products at this level are equipped for use in areas where professional anti-corrosion protection is a must. Typical application scenarios include coastlines, docks, chemical plants, and more.
Moderate protection	Hikvision products at this level are equipped for use in areas with moderate anti-corrosion demands. Typical application scenarios include coastal areas about 2 kilometers (1.24 miles) away from coastlines, as well as areas affected by acid rain.
No specific protection	Hikvision products at this level are equipped for use in areas where no specific anti-corrosion protection is needed.

▪ Dimension

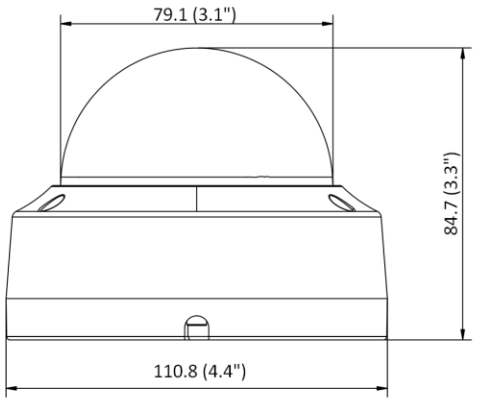

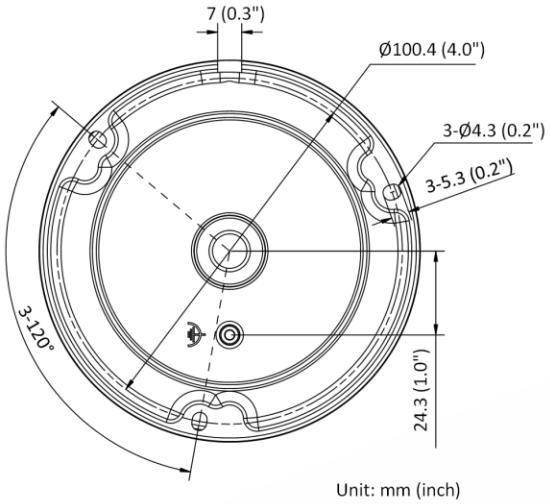

▪ Accessory

▪ Optional

DS-1475ZJ-SUS	DS-1276ZJ-SUS	DS-1250ZJ	DS-1476ZJ-SUS	DS-1275ZJ-S-SUS
				
DS-1275ZJ-SUS	**DS-1272ZJ-110B**	**DS-220AZJ-145-WA**	**DS-1271ZJ-110**	**DS-1280ZJ-DM18**

				
DS-1272ZJ-110	DS-1259ZJ	DS-220AZJ-130-WA	DS-1258ZJ	
				

▪ Installation Methods

Vertical Pole Mounting DS-1475ZJ-SUS+DS-220AZJ-130-WA	Vertical Pole Mounting DS-1275ZJ-S-SUS+DS-220AZJ-130-WA	Vertical Pole Mounting DS-1275ZJ-SUS+DS-1272ZJ-110B+DS-1253ZJ-M	Corner Mounting DS-1276ZJ-SUS+DS-1272ZJ-110+DS-1253ZJ-M	Corner Mounting DS-1476ZJ-SUS+DS-220AZJ-130-WA
		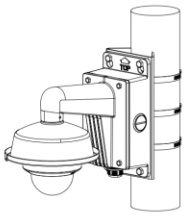	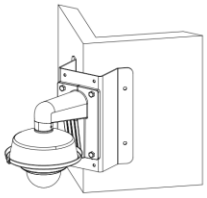	
Others DS-1250ZJ	Wall Mounting DS-1272ZJ-110B	Wall Mounting DS-220AZJ-145-WA	Wall Mounting DS-1272ZJ-110+DS-1253ZJ-M	Wall Mounting DS-220AZJ-130-WA
				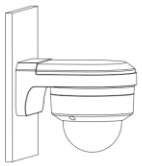
Wall Mounting DS-1258ZJ	Pendant Mounting DS-1271ZJ-110	Junction Box DS-1280ZJ-DM18	Inclined Ceiling Mounting DS-1259ZJ	

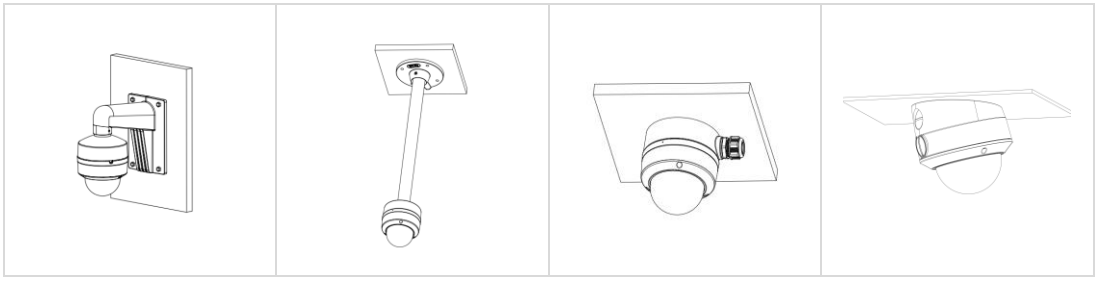

See Far, Go Further

www.hikvision.com
support@hikvision.com

© Hangzhou Hikvision Digital Technology Co., Ltd. Unless otherwise agreed, Hikvision makes no warranties, express or implied. We reserve the right to introduce modifications without notice.

HIKVISION®