DS-2CE78U7T-IT3F
4K Ultra Low Light Fixed Turret Camera



- 8 MP high performance turret camera
- Strong night performance, capturing images in ultra-low light down to 0.003 lux
- Clear imaging even against strong back lighting due to 130 dB true WDR technology
- 3D DNR technology delivers clean and sharp images
- EXIR 2.0: advanced infrared technology with 60 m IR distance
- Water and dust resistant (IP67)
- 4 in 1 (4 signals switchable TVI/AHD/CVI/CVBS)

▪ Specification

Camera	
Image Sensor	8.29 MP CMOS
Max. Resolution	3840 (H) × 2160 (V)
Min. Illumination	0.003 Lux@(F1.6, AGC ON), 0 Lux with IR
Shutter Time	PAL: 1/12.5 s to 1/50,000 s NTSC: 1/15 s to 1/50,000 s
Day & Night	ICR
Angle Adjustment	Pan: 0° to 360°, Tilt:0° to 75°, Rotate: 0° to 360°
Signal System	PAL/NTSC
Lens	
Lens Type	2.8 mm, 3.6 mm, 6 mm, 8 mm, 12 mm fixed lens
Focal Length & FOV	102° (2.8 mm), 79° (3.6 mm), 51° (6 mm), 38° (8 mm), 24° (12 mm)
Lens Mount	M16
Image	
Image Parameters Switch	STD/HIGH-SAT
Image Settings	Brightness, Sharpness, Mirror, Smart IR
Frame Rate	TVI: 8MP@12.5fps, 8MP@15fps, 5MP@20fps, 4MP@25fps, 4MP@30fps, 1080P@25fps, 1080P@30fps AHD: 8MP@12.5fps, 8MP@15fps CVI: 8MP@12.5fps, 8MP@15fps CVBS: P/N
Day/Night Mode	Auto/Color/BW (Black and White)
Wide Dynamic Range (WDR)	≥130 dB
Image Enhancement	BLC, HLC
White Balance	Auto/Manual
AGC	Support
Interface	
Video Output	Switchable TVI/AHD/CVI/CVBS
General	
Material	Enclosure: Plastic Main body: Metal
Dimension	Φ 109.82 mm × 91.03 mm (Φ 4.32" × 3.6")
Weight	Approx. 325 g (0.72 lb.)
Operating Condition	'-40 °C to 60 °C (-40 °F to 140 °F), humidity: 90% or less (non-condensation)
Communication	HIKVISION-C
Language	English
Power Supply	12 VDC ± 25% *You are recommended to use one power adapter to supply the power for one camera.
Consumption	Max. 4.2 W
IR Range	Up to 60 m
Approval	
Protection	IP67

▪ Available Model

DS-2CE78U7T-IT3F(2.8mm)

DS-2CE78U7T-IT3F(3.6mm)

DS-2CE78U7T-IT3F(6mm)

DS-2CE78U7T-IT3F(8mm)

DS-2CE78U7T-IT3F(12mm)

▪ Dimension

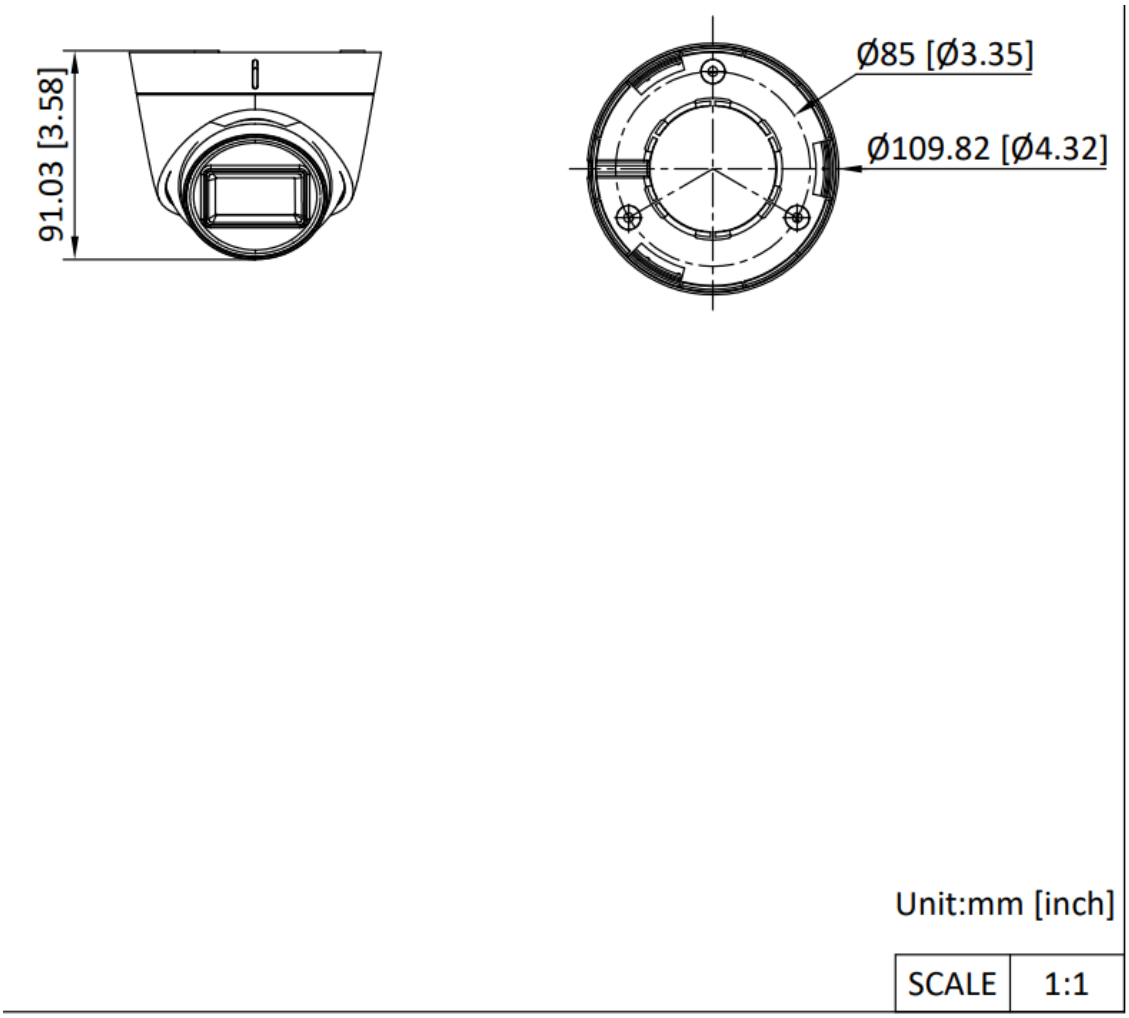

▪ Accessory

▪ Optional

DS-1280ZJ-S	DS-1272ZJ-110-TRS	DS-1276ZJ-SUS	DS-1275ZJ-SUS
			

See Far, Go Further

www.hikvision.com
support@hikvision.com

© Hangzhou Hikvision Digital Technology Co., Ltd. Unless otherwise agreed, Hikvision makes no warranties, express or implied. We reserve the right to introduce modifications without notice.

HIKVISION®