# DS-2CD1123G2-LIU/AB
# 2 MP Smart Hybrid Light Fixed Dome Network Camera







- High quality imaging with 2 MP resolution
- Support Human and Vehicle Detection
- Smart Hybrid Light: advanced technology with long range
- Built-in microphone for real-time audio security
- Efficient H.265+ compression technology
- Support on-board storage up to 512 GB (SD card slot) (Optional)
- Water and dust resistant (IP67) and vandal resistant (IK08)

## ▪ Specification

| | |
|---|---|
| **Camera** | |
| Image Sensor | 1/2.9" Progressive Scan CMOS |
| Max. Resolution | 1920 × 1080 |
| Shutter Time | 1/3 s to 1/100,000 s |
| Min. Illumination | Color: 0.005 Lux @ (F1.6, AGC ON),B/W: 0 Lux with IR |
| Day & Night | IR cut filter |
| Angle Adjustment | Pan: 0° to 355°,tilt: 0° to 75°,rotate: 0° to 355° |
| **Lens** | |
| Lens Type | Fixed focal lens, 2.8 and 4 mm optional |
| Focal Length & FOV | 2.8 mm, horizontal FOV 103°, vertical FOV 56°, diagonal FOV 121°<br>4 mm, horizontal FOV 83°, vertical FOV 44°, diagonal FOV 99° |
| Lens Mount | M12 |
| Iris Type | Fixed |
| Aperture | F1.6 |
| **DORI** | |
| DORI | 2.8 mm, D: 45 m, O: 18 m, R: 9 m, I: 4 m<br>4 mm, D: 56 m, O: 22 m, R: 11 m, I: 5 m |
| **Illuminator** | |
| Supplement Light Type | IR,White Light |
| Supplement Light Range | Up to 30 m |
| Smart Supplement Light | Yes |
| IR Wavelength | 850 nm |
| **Video** | |
| Main Stream | 50 Hz: 25 fps (1920 × 1080, 1280 × 720)<br>60 Hz: 30 fps (1920 × 1080, 1280 × 720) |
| Sub-Stream | 50 Hz: 25 fps (640 × 480, 640 × 360)<br>60 Hz: 30 fps (640 × 480, 640 × 360) |
| Video Compression | Main stream: H.265+/H.265/H.264+/H.264,<br>Sub-stream: H.265/H.264/MJPEG |
| Video Bit Rate | 32 Kbps to 8 Mbps |
| H.264 Type | Baseline Profile,Main Profile,High Profile |
| H.265 Type | Main Profile |
| Bit Rate Control | CBR,VBR |
| Region of Interest (ROI) | 1 fixed region for main stream |
| **Audio** | |
| Audio Type | Mono sound |
| Environment Noise Filtering | Yes |
| Audio Sampling Rate | 8 kHz/16 kHz |
| Audio Compression | G.711ulaw/G.711alaw/G.722.1/G.726/MP2L2/PCM/AAC-LC |
| Audio Bit Rate | 64 Kbps (G.711 ulaw)/64 Kbps (G.711 alaw)/16 Kbps (G.722.1)/16 Kbps (G.726)/32 to 160 Kbps (MP2L2)/16 to 64 Kbps (AAC-LC) |
| **Network** | |
| Security | Password protection, complicated password, watermark, basic and digest authentication for HTTP, WSSE and digest authentication for Open Network Video Interface, security audit log, host authentication (MAC address) |

| | |
|---|---|
| Simultaneous Live View | Up to 6 channels |
| API | Open Network Video Interface (Profile S, Profile T, Profile G (only -F model supports)),ISAPI,SDK |
| Protocols | TCP/IP, ICMP, DHCP, DNS, HTTP, RTP, RTSP, RTCP, NTP, IGMP, IPv4, IPv6, UDP, QoS, FTP, SMTP |
| User/Host | Up to 32 users<br>3 user levels: administrator, operator, and user |
| Client | iVMS-4200,Hik-Connect |
| Web Browser | Plug-in required live view: IE 10, IE 11,<br>Local service: Chrome 57.0+, Firefox 52.0+ |
| **Image** | |
| Wide Dynamic Range (WDR) | Digital WDR |
| SNR | ≥ 52 dB |
| Day/Night Switch | Day,Night,Auto,Schedule |
| Image Enhancement | BLC,HLC,3D DNR |
| Image Settings | Rotate mode,saturation,brightness,contrast,sharpness,gain,white balance,adjustable by client software or web browser |
| Privacy Mask | 4 programmable polygon privacy masks |
| **Interface** | |
| Ethernet Interface | 1 RJ45 10 M/100 M self-adaptive Ethernet port |
| On-Board Storage | -F: Built-in memory card slot, support microSD/microSDHC/microSDXC card, up to 512 GB |
| Built-in Microphone | Yes |
| Reset Key | -F: Yes |
| **Event** | |
| Basic Event | Motion detection (support alarm triggering by specified target types (human and vehicle)),video tampering alarm,exception |
| Linkage | Upload to FTP/memory card (-F), send email, notify surveillance center, trigger recording (-F), trigger capture |
| **General** | |
| Power | 12 VDC ± 25%, 0.5 A, max. 6 W,Ø5.5 mm coaxial power plug,reverse polarity protection,<br>PoE: IEEE 802.3af, Class 3, max. 7.5 W |
| Material | Metal & Plastic |
| Dimension | Ø121.4 mm × 97.7 mm (Ø4.8" × 3.8") |
| Package Dimension | 150 mm × 150 mm × 141 mm (5.9" × 5.9" × 5.6") |
| Weight | Approx. 550 g (1.2 lb.) |
| With Package Weight | Approx. 800 g (1.8 lb.) |
| Storage Conditions | -30 °C to 60 °C (-22 °F to 140 °F). Humidity 95% or less (non-condensing) |
| Startup and Operating Conditions | -30 °C to 60 °C (-22 °F to 140 °F). Humidity 95% or less (non-condensing) |
| Language | English, Ukrainian |
| General Function | Heartbeat,anti-banding,mirror,password protection,password reset via email |

| Approval | |
|---|---|
| EMC | FCC: 47 CFR Part 15, Subpart B,<br>CE-EMC: EN 55032: 2015, EN 61000-3-2:2019, EN 61000-3-3: 2013+A1:2019, EN 50130-4: 2011 +A1: 2014,<br>RCM: AS/NZS CISPR 32: 2015,<br>IC: ICES-003: Issue 7 |
| Safety | UL: UL 62368-1,<br>CB: IEC 62368-1: 2014+A11,<br>CE-LVD: EN 62368-1: 2014/A11: 2017,<br>BIS: IS 13252 (Part 1): 2010/IEC 60950-1: 2005 |
| Environment | CE-RoHS: 2011/65/EU,<br>WEEE: 2012/19/EU,<br>Reach: Regulation (EC) No 1907/2006 |
| Protection | IP67: IEC 60529-2013,IK08: IEC 62262:2002 |

## ▪ Typical Application

Hikvision products are classified into three levels according to their anti-corrosion performance. Refer to the following description to choose for your using environment.

This model has NO SPECIFIC PROTECTION.

| Level | Description |
|---|---|
| Top-level protection | Hikvision products at this level are equipped for use in areas where professional anti-corrosion protection is a must. Typical application scenarios include coastlines, docks, chemical plants, and more. |
| Moderate protection | Hikvision products at this level are equipped for use in areas with moderate anti-corrosion demands. Typical application scenarios include coastal areas about 2 kilometers (1.24 miles) away from coastlines, as well as areas affected by acid rain. |
| No specific protection | Hikvision products at this level are equipped for use in areas where no specific anti-corrosion protection is needed. |

## ▪ Dimension

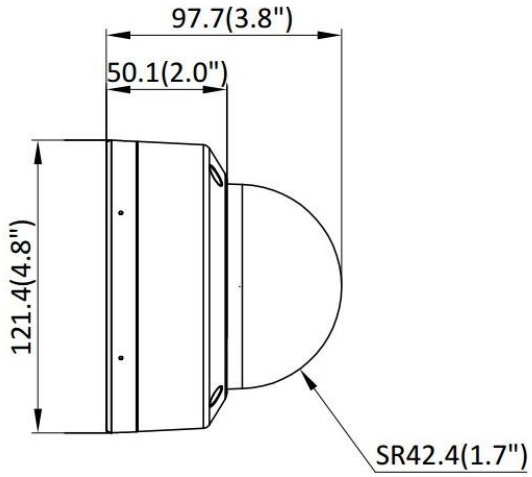


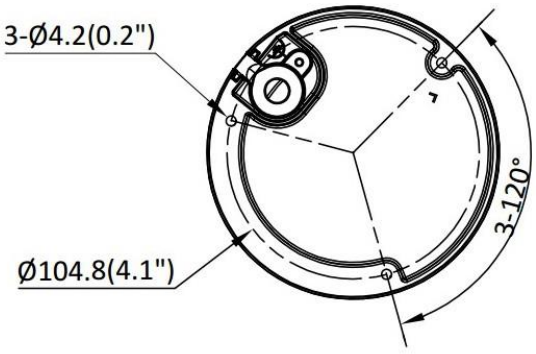


Unit: mm(inch)

## ▪ Accessory

### ▪ Optional

| DS-1276ZJ-SUS | DS-1275ZJ-SUS | DS-1272ZJ-120 | DS-1271ZJ-120 | DS-1476ZJ-SUS |
|---|---|---|---|---|
|  |  |  |  |  |
| **DS-220AZJ-130-WA** | **DS-1275ZJ-S-SUS** | **DS-1272ZJ-120B** | **DS-1475ZJ-SUS** | **DS-220AZJ-145-WA** |
|  |  |  |  |  |
| **DS-4221ZJ-WC** | **DS-1280ZJ-DM46** | | | |
|  |  | | | |

### ▪ Installation Methods

| Corner Mounting<br>DS-1276ZJ-SUS+DS-1272ZJ-120+DS-1253ZJ-M | Corner Mounting<br>DS-1476ZJ-SUS+DS-220AZJ-145-WA | Vertical Pole Mounting<br>DS-1275ZJ-SUS+DS-1272ZJ-120B+DS-1253ZJ-M | Vertical Pole Mounting<br>DS-1275ZJ-S-SUS+DS-220AZJ-130-WA | Vertical Pole Mounting<br>DS-1475ZJ-SUS+DS-220AZJ-145-WA |
|---|---|---|---|---|
| 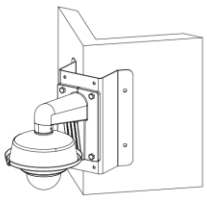 | 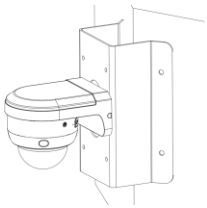 | 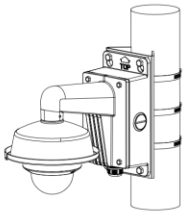 |  |  |
| **Wall Mounting<br>DS-1272ZJ-120+DS-1280ZJ-DM46** | **Wall Mounting<br>DS-220AZJ-130-WA** | **Wall Mounting<br>DS-1272ZJ-120B+DS-1253ZJ-M** | **Wall Mounting<br>DS-220AZJ-145-WA** | **Pendant Mounting<br>DS-1271ZJ-120** |
| 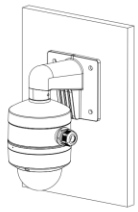 | 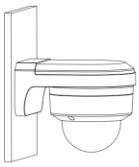 | 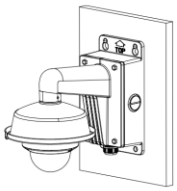 | 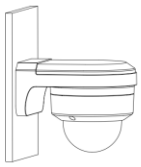 |  |
| **In-Ceiling Mounting<br>DS-4221ZJ-WC** | **Junction Box<br>DS-1280ZJ-DM46** | | | |
| 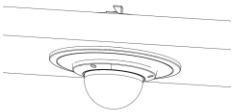 | 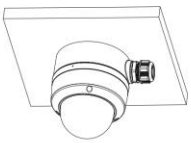 | | | |

See Far, Go Further

www.hikvision.com
support@hikvision.com

© Hangzhou Hikvision Digital Technology Co., Ltd. Unless otherwise agreed, Hikvision makes no warranties, express or implied. We reserve the right to introduce modifications without notice.

HIKVISION®