DP-D40XXCE11-1X1-Q0.1-NW-Q0.1-HC
250*250mm 1*1 Cabinet Bracket

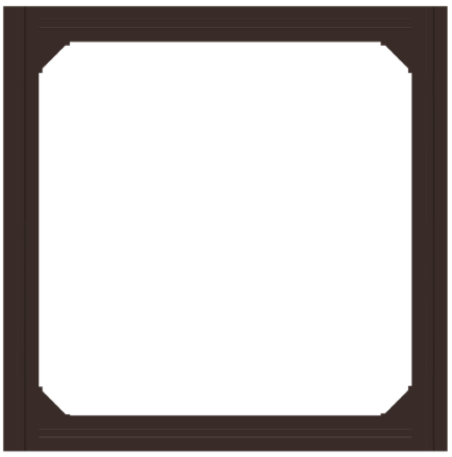

- Cost-effective
- Block-based design
- Quick and easy installation
- Thinner and lighter
- Extension supported

▪ Specification

General	
Package Dimension (W × H × D)	290(W) mm × 290(H) mm × 70(D) mm (11.42'' × 11.42'' × 2.76'')
Gross Weight	2.3 ± 0.5 Kg (5.08 ± 1.1 lb)
Net Weight	1.1 ± 0.5 Kg (2.43 ± 1.1 lb)
Dimension (W × H × D)	250 mm × 250 mm × 40 mm (9.84'' × 9.84'' × 1.57'')
Default Parameters	
Color	Black
Material	AL6063
Surface Treatment	Electrostatic spraying

▪ Dimension

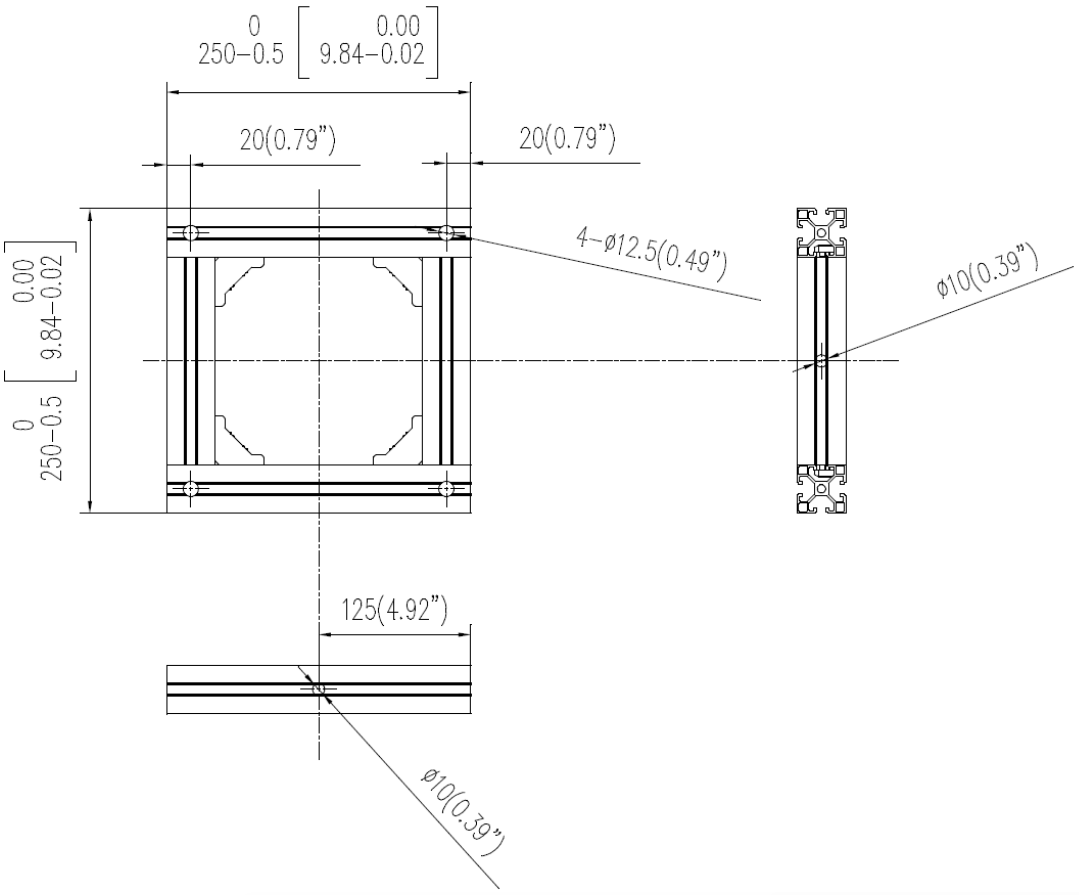

▪ Accessory



DS-D40CE11-2F

See Far, Go Further

www.hikvision.com
support@hikvision.com

© Hangzhou Hikvision Digital Technology Co., Ltd. Unless otherwise agreed, Hikvision makes no warranties, express or implied. We reserve the right to introduce modifications without notice.

HIKVISION®