DP-D40XXCE22-1X1-Q0.3-NW-Q0.3-HC
500*500mm 1*1 Cabinet Bracket

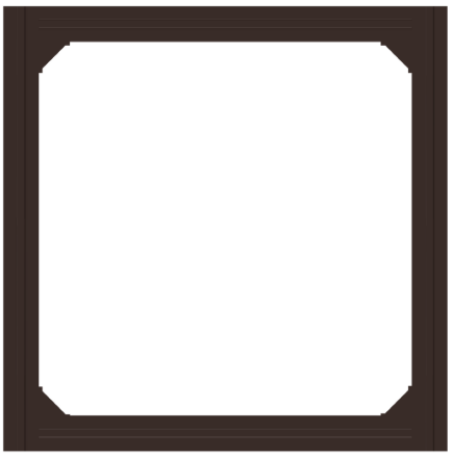

- Cost-effective
- Block-based design
- Quick and easy installation
- Thinner and lighter
- Extension supported

▪ Specification

General	
Package Dimension (W × H × D)	540(W) mm × 540(H) mm × 70(D) mm (21.26'' × 21.26'' × 2.76'')
Gross Weight	4.1 ± 0.5 Kg (9.05 ± 1.1 lb)
Net Weight	2.6 ± 0.5 Kg (5.74 ± 1.1 lb)
Dimension (W × H × D)	500 mm × 500 mm × 40 mm (19.69'' × 19.69'' × 1.57'')
Default Parameters	
Color	Black
Material	AL6063
Surface Treatment	Electrostatic spraying

▪ Dimension

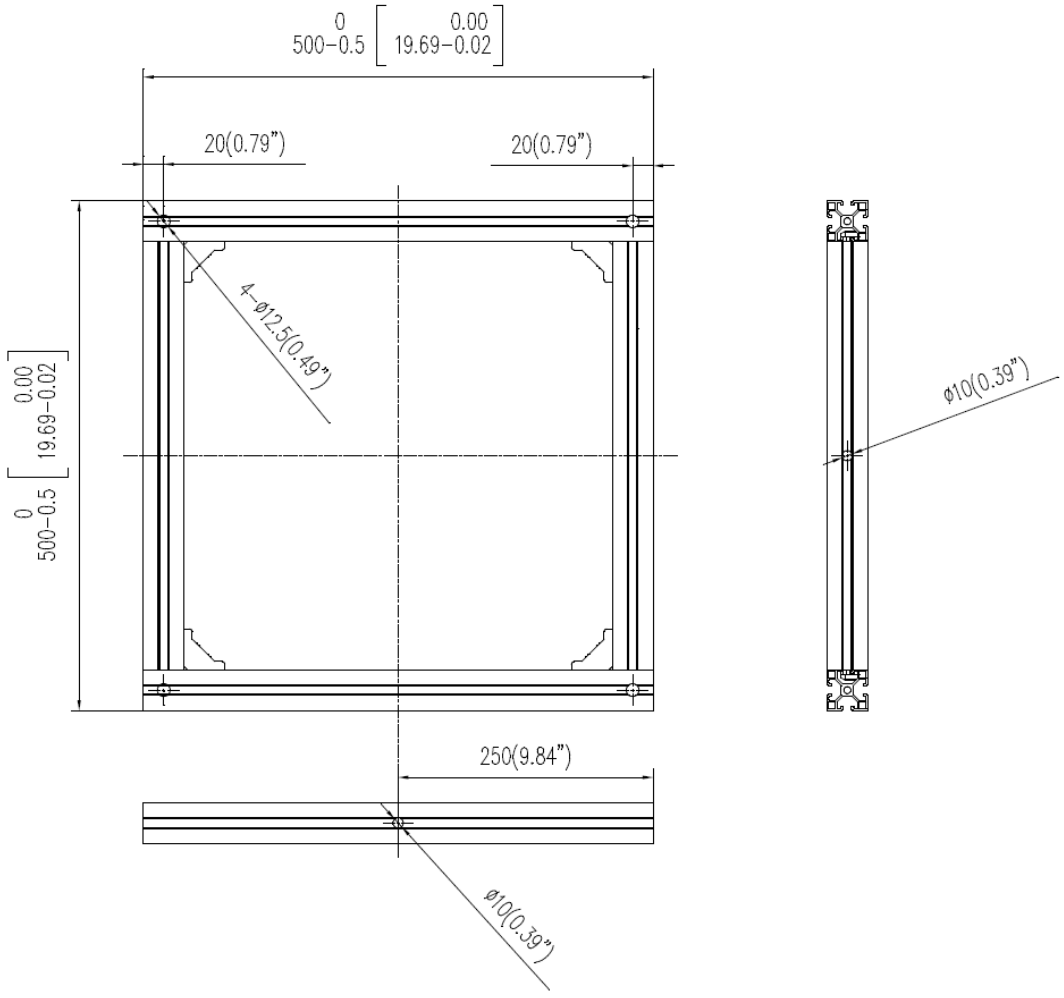

▪ Accessory



DS-D40CE22-2F

See Far, Go Further

www.hikvision.com
support@hikvision.com

© Hangzhou Hikvision Digital Technology Co., Ltd. Unless otherwise agreed, Hikvision makes no warranties, express or implied. We reserve the right to introduce modifications without notice.

HIKVISION®