iDS-2CD5T87G2/V-X(H)S(Y)

8MP DeepinViewX Fixed Lens Bullet Camera for Perimeter Protection



Hikvision has been dedicated to develop products with security since established.
Hikvision always follows security by design principle and has adopted many methods of security technologies into our product development lifecycle, including terminal security, data security, application security, network security, and privacy protection. In the meantime, the security technologies used by Hikvision are all in compliance with local applicable laws and safety regulations. These security measures could enhance product's cyber security protection capability and protect your devices as well as your data from malicious cyber attacks.

- High quality imaging with 8 MP resolution
- Excellent low-light performance via DarkFighter2.0 technology
- Efficient H.265+ compression technology to save bandwidth and storage
- Water and dust resistant (IP67), vandal proof (IK10) and corrosion resistant (NEMA 4X, optional)
- Built-in front window heater to ensure clear image under rainy or snowy weather
- Dedicated large scale AI model for perimeter protection, reduce false alarms by 90% compared to conventional AI cameras
- Powered by Guanlan large-scale model, camera supports AI Encoding to reduce storage usage by 50% while keeping image quality of key targets like human and vehicles.

▪ Function

Perimeter Protection

With embedded deep learning based target detection and classification algorithms, the camera carries out the duty of perimeter protection, monitoring the actions of line crossing, intrusion, region entrance, and region exiting. The algorithms greatly filter out the mistaken alarm caused by the interference of leafs, lights, animal, flag, etc.

▪ Specification

Camera	
Image Sensor	1/1.8" Progressive Scan CMOS
Max. Resolution	3840 × 2160
Min. Illumination	Color: 0.0005 Lux @ (F1.0, AGC ON),0 Lux with light
Shutter Time	1 s to 1/100,000 s
Day & Night	IR cut filter, Blue glass module (less ghost phenomenon)
Lens	
Focal Length & FOV	2.8 mm, horizontal FOV 104°, vertical FOV 54°, diagonal FOV 127° 4 mm, horizontal FOV 89°, vertical FOV 46°, diagonal FOV 108°
Iris Type	Fixed
Aperture	F1.0
DORI	
DORI	2.8 mm, D (Detect): 61 m, O (Observe): 24 m, R (Recognize): 12 m, I (Identify): 6 m 4 mm, D (Detect): 75 m, O (Observe): 30 m, R (Recognize): 15 m, I (Identify): 7 m The DORI values are calculated using pixel densities for different use cases as recommended by the EN 62676-4 standard.
Illuminator	
Supplement Light Type	IR,White Light
Supplement Light Range	IR: up to 80 m White Light: up to 60 m
Smart Supplement Light	Yes
IR Wavelength	850 nm
AI Open Platform	
Model Specification	Model type for AI Open Platform trained algorithm loading: high-performance model (small model). Supports 4 model packages, each capable of detecting 16 target types and classifying 4 targets. The targets can be classified as 64 types. The device runs only 1 model at the same time.
Video	
Main Stream	50 Hz: 25 fps (3840 × 2160, 3072 × 1728, 2560 × 1440, 1920 × 1080, 1280 × 720) 60 Hz: 30 fps (3840 × 2160, 3072 × 1728, 2560 × 1440, 1920 × 1080, 1280 × 720)
Sub-Stream	50 Hz: 25 fps (704 × 576, 640 × 480) 60 Hz: 30 fps (704 × 480, 640 × 480)
Third Stream	50 Hz: 25 fps (1920 × 1080, 1280 × 720, 704 × 576, 640 × 480) 60 Hz: 30 fps (1920 × 1080, 1280 × 720, 704 × 480, 640 × 480)
Fourth Stream	50 Hz: 25fps (704 × 576, 640 × 480) 60 Hz: 30fps (704 × 480, 640 × 480)
Video Compression	Main stream: H.265+/H.265/H.264+/H.264, Sub-stream: H.265/H.264/MJPEG, Third stream: H.265/H.264, Fourth stream: H.265/H.264/MJPEG
Video Bit Rate	32 Kbps to 16 Mbps
H.264 Type	Baseline Profile,Main Profile,High Profile

H.265 Type	Main Profile
Bit Rate Control	CBR,VBR
Scalable Video Coding (SVC)	H.264 and H.265 encoding
Region of Interest (ROI)	8 fixed regions for each stream
AI Encoding	Yes
Audio	
Audio Type	Mono sound
Audio Compression	G.711/G.722.1/G.726/MP2L2/PCM/MP3/AAC-LC
Audio Bit Rate	64 Kbps (G.711ulaw/G.711alaw)/16 Kbps (G.722.1)/16 Kbps (G.726)/32 to 192 Kbps (MP2L2)/8 to 320 Kbps (MP3)/16 to 64 Kbps (AAC-LC)
Audio Sampling Rate	8 kHz/16 kHz/32 kHz/48 kHz
Environment Noise Filtering	Yes
Network	
Protocols	TCP/IP, ICMP, HTTP, HTTPS, FTP, SFTP, DHCP, DNS, DDNS, SRTP, RTP, RTSP, RTCP, PPPoE, NTP, UPnP, SMTP, SNMP, IGMP, 802.1X, QoS, IPv4, IPv6, UDP, Bonjour, SSL/TLS, ARP, WebSocket, WebSockets
Simultaneous Live View	Up to 20 channels
API	ISAPI,SDK,ISUP,OTAP,ONVIF (Profile S, Profile G, Profile T, Profile M)
User/Host	Up to 32 users 3 user levels: administrator, operator, and user
Security	Password protection, complicated password, HTTPS encryption, 802.1X authentication (EAP-TLS, EAP-LEAP, EAP-MD5), watermark, IP address filter, basic and digest authentication for HTTP/HTTPS, WSSE and digest authentication for Open Network Video Interface, RTP/RTSP OVER HTTPS, Control Timeout Settings, Security Audit Log, TLS 1.2, TLS 1.3, AES128/256
Network Storage	NAS (NFS, SMB/CIFS),Auto Network Replenishment (ANR), Together with high-end Hikvision memory card, memory card encryption and health detection are supported.
Client	iVMS-4200,Hik-Connect,Hik-Central
Web Browser	Plug-in required live view: IE 10, IE 11, Plug-in free live view: Chrome 57.0+, Firefox 52.0+, Edge 89+, Safari 11+, Local service: Chrome 57.0+, Firefox 52.0+, Edge 89+
Image	
Image Parameters Switch	Yes
Image Settings	Rotate mode,saturation,brightness,contrast,sharpness,white balance,AGC,adjustable by client software or web browser
Day/Night Switch	Day,Night,Auto,Schedule,Alarm Trigger
Wide Dynamic Range (WDR)	130 dB
Image Enhancement	BLC,HLC,3D DNR,Distortion Correction,Defog
Privacy Mask	8 programmable polygon privacy masks
SNR	≥ 52 dB
Picture Overlay	LOGO picture can be overlaid on video with 128 × 128 24 bit bmp format.
Image Stabilization	EIS
Interface	
Ethernet Interface	1 RJ45 10 M/100 M self-adaptive Ethernet port
On-Board Storage	Built-in memory card slot, support microSD/microSDHC/microSDXC card, up to 1 TB

Alarm	1 input, 1 output (max. 24 VDC/24 VAC, 1 A)
Built-in Microphone	2 built-in microphones
Built-in Speaker	1 built-in speaker,Max. power consumption: 1.5 W
Audio	1 input (line in), 3.5 mm connector, three-contact, max. input amplitude: 3.3 Vpp, input impedance: 4.7 KΩ, interface type: non-equilibrium, 1 output (line out), 3.5 mm connector, three-contact, max. output amplitude: 3.3 Vpp, output impedance: 100 Ω, interface type: non-equilibrium, mono sound
RS-485	1 RS-485 (Half duplex, HIKVISION, Pelco-P, Pelco-D, self-adaptive)
Reset Key	Yes
Power Output	12VDC,max.100mA,External extension cord less than 10 meters.
Event	
Basic Event	Motion detection (support alarm triggering by specified target types (human and vehicle)),video tampering alarm,video quality diagnosis,exception (network disconnected, IP address conflict, illegal login, abnormal restart, HDD full, HDD error)
Smart Event	scene change detection,audio exception detection,defocus detection,loitering detection,people gathering detection,fast moving detection,parking detection, unattended baggage detection,object removal detection
Linkage	Upload to FTP/NAS/memory card,notify surveillance center,send email,trigger alarm output,trigger recording,trigger capture,audible warning
Deep Learning Function	
Perimeter Protection	Line crossing, intrusion, region entrance, region exiting Support alarm triggering by specified target types (human and vehicle) Support combined event alarm triggering Dedicated large scale AI model for perimeter protection, reduce false alarms by 90% compared to conventional AI cameras VCA range: 4 mm models: 5 m to 80 m (daytime), 5 m to 60 m (nighttime) 2.8 mm models: 3 m to 70 m (daytime), 3 m to 50 m (nighttime) *Result based on standard setup and test environment
Multi-target-type Detection	Supports simultaneous detection and capture of human body, face, and vehicle,, Gets face features, Gets human body features, Gets vehicle features, Supports counting the number of line crossing targets by type, including human body, non-motor vehicle, motor vehicle
Face Capture	Detects up to 60 faces simultaneously, Supports swing left and right from -60° to 60°, tilt up and down from -30° to 30°
Heat Map	A graphic description of visits (by calculating amount of people or amount of dwell time) in a configured area., Two report types are available, space heat map and time heat map line chart.
Metadata	Intrusion detection,line crossing detection,region entrance detection,region exiting detection

Regional People Counting	Supports up to 8 detection regions, and independent arming schedule and linkage method Supports 3 detection modes: people density detection, number of people exception detection, waiting time exception detection Supports parameter settings: alarm times per exception, alarm interval, first alarm delay Supports searching real-time number of people People density detection: supports scheduled uploading, number of people change uploading, congestion level uploading Number of people exception detection: supports 6 alarm trigger conditions, including greater than threshold A, less than threshold A, equal to threshold A, not equal to threshold A, greater than threshold A and less than threshold B, less than threshold A or greater than threshold B (threshold A should be less than threshold B) Waiting time exception detection: supports 3 alarm trigger conditions, including greater than threshold A, less than threshold A, greater than threshold A and less than threshold B (threshold A should be less than threshold B)
On/Off Duty Detection	Supports up to 8 detection regions, and independent arming schedule and linkage method, Supports 2 detection modes: absence detection, on/off duty detection, Supports parameter settings: person on duty, absence duration
AcuSeek	Support search for humans, vehicles, This function requires use with AcuSeek NVR/Servers.
General	
Power	two-core terminal block, 12 VDC ± 20%, 1.6 A, max. 19.2 W, PoE: IEEE 802.3at, Type 2, Class 4, 42.5 V to 57 V, 0.54 A to 0.4 A, max. 22.8 W
Material	Aluminum alloy body
Dimension	323.4 mm × 114.5 mm × 114.5 mm (12.73" × 4.51" × 4.51")
Package Dimension	386 mm × 156 mm × 155 mm (15.3" × 6.2" × 6.2")
Weight	Approx. 1400 g (3 lb.)
With Package Weight	Approx. 2101 g (4.59 lb.)
Storage Conditions	-30 °C to 60 °C (-22 °F to 140 °F). Humidity 95% or less (non-condensing)
Startup and Operating Conditions	With -H: -40 °C to 60 °C (-40 °F to 140 °F). Humidity 95% or less (non-condensing), Without -H: -30 °C to 60 °C (-40 °F to 140 °F). Humidity 95% or less (non-condensing)
Language	33 languages: English, Russian, Estonian, Bulgarian, Hungarian, Greek, German, Italian, Czech, Slovak, French, Polish, Dutch, Portuguese, Spanish, Romanian, Danish, Swedish, Norwegian, Finnish, Croatian, Slovenian, Serbian, Turkish, Korean, Traditional Chinese, Thai, Vietnamese, Japanese, Latvian, Lithuanian, Portuguese (Brazil), Ukrainian
General Function	Heartbeat,anti-banding,one-key reset,mirror,password protection,flash log
Heater	Yes
Demist	Yes
Integrated Connector Panel	No
Approval	
EMC	CE-EMC: EN 55032:2015+A1:2020, EN 50130-4:2011+A1:2014, EN IEC 61000-3-2:2019+A1:2021, EN 61000-3-3:2013+A1:2019+A2:2021, RCM: AS/NZS CISPR 32: 2015

Safety	CB: IEC 62368-1:2014+A11, CE-LVD: EN 62368-1:2014/A11:2017
Environment	CE-RoHS: 2011/65/EU, WEEE: 2012/19/EU, Reach: Regulation (EC) No 1907/2006
Protection	IP67:IEC 60529-2013,IK10:IEC 62262:2002
Anti-Corrosion Protection	-Y: NEMA 4X (NEMA 250-2018)

▪ Typical Application

Hikvision products are classified into three levels according to their anti-corrosion performance. Refer to the following description to choose for your using environment.

With -Y model: This model has MODERATE PROTECTION.
Without -Y model: This model has NO SPECIFIC PROTECTION.

Level	Description
Top-level protection	Hikvision products at this level are equipped for use in areas where professional anti-corrosion protection is a must. Typical application scenarios include coastlines, docks, chemical plants, and more.
Moderate protection	Hikvision products at this level are equipped for use in areas with moderate anti-corrosion demands. Typical application scenarios include coastal areas about 2 kilometers (1.24 miles) away from coastlines, as well as areas affected by acid rain.
No specific protection	Hikvision products at this level are equipped for use in areas where no specific anti-corrosion protection is needed.

▪ Dimension

Unit:mm(inch)

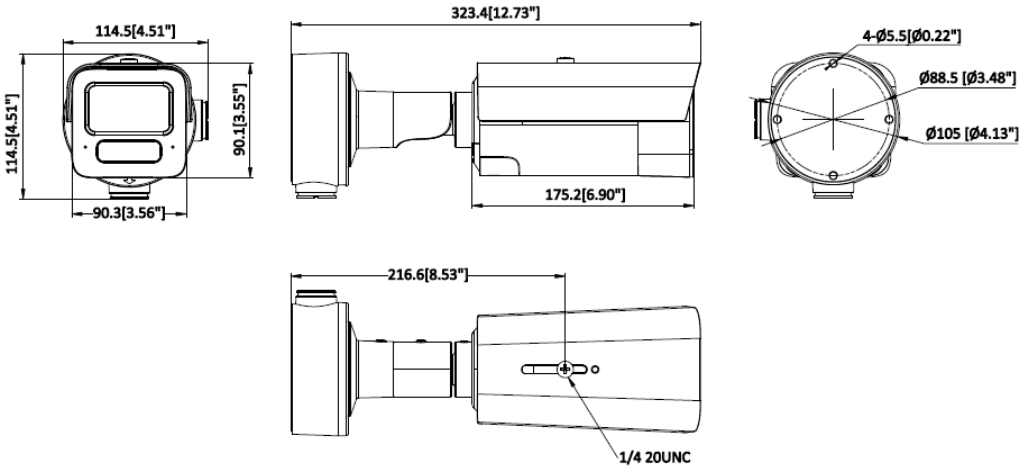

Camera Mounting Hole (mm)	Camera Mounting Hole (inch)
ϕ88.5(4×Ø5.5)	ϕ3.48"(4×Ø0.22")

▪ Accessory

▪ Optional

DS-1276ZJ-SUS	DS-1275ZJ-S-SUS	DS-1275ZJ-Y	DS-1275ZJ-SUS
			

▪ Installation Methods

Corner Mounting DS-1276ZJ-SUS	Vertical Pole Mounting DS-1275ZJ-S-SUS	Vertical Pole Mounting DS-1275ZJ-Y	Vertical Pole Mounting DS-1275ZJ-SUS

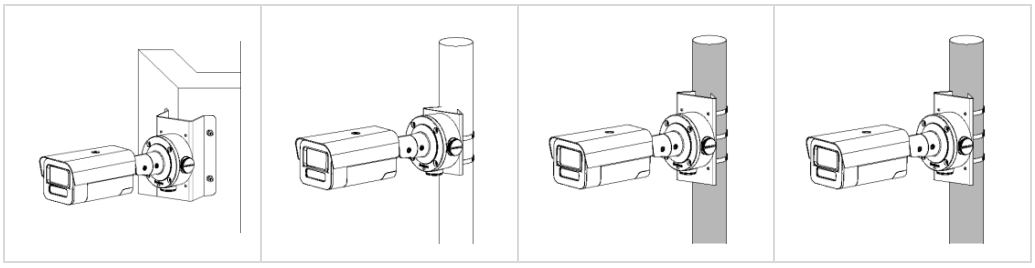

See Far, Go Further

www.hikvision.com
support@hikvision.com

© Hangzhou Hikvision Digital Technology Co., Ltd. Unless otherwise agreed, Hikvision makes no warranties, express or implied. We reserve the right to introduce modifications without notice.

HIKVISION