# HM-TD4137-25/WY
# Thermal & Optical Bi-spectrum Network Speed Dome







Hikmicro Thermal and Optical Bi-spectrum Network Speed Dome equipped with built-in GPU which sup ports intelligent perimeter protection algorithm, can realize high-precision VCA detection and real-time alarm. It is applied for perimeter protection and fire-prevention in critical infrastructures such as community, villa, construction site, factory, 4S stores, and so on . The pre-alarm system helps you discover unexpected events immediately and protects your property.

- Perimeter protection function, based on intelligent algorithm: line crossing, intrusion, region entrance and exit
- Temperature exception alarm for fire prevention
- 384 × 288 (the resolution of output image is 384 × 288) resolution 17 μm, VOx UFPA, NETD ≤ 40 mK (25 °C, F# = 1.1)
- Image processing technology: Liner, histogram, and self-adaptive thermal AGC mode, DDE, 3D DNR
- High quality detector with 10 years guarantee
- Smart tracking: Panorama tracking, Event tracking and Multi-scene patrol tracking
- Thermal channel supports EIS, conflicted with intelligent function
- Fire and smoke detection algorithm
- Anti-corrosion coatings

## ▪ Specification

| | |
|---|---|
| **Thermal Module** | |
| Image Sensor | VOx Uncooled Focal Plane Arrays |
| Resolution | 384 × 288 |
| Pixel Interval | 17 μm |
| Response Waveband | 8 μm to 14 μm |
| NETD | Less than 40 mK (@ 25 ℃,F#=1.0) |
| Focal Length | 25 mm |
| Focus Mode | Athermalized |
| IFOV | 0.68 mrad |
| Aperture | F1.0 |
| Field of View | 14.9° × 11.2° (H × V) |
| Min. Focusing Distance | 13m |
| Digital Zoom | ×2, ×4, ×8 |
| **Optical Module** | |
| Image Sensor | 1/1.8" Progressive Scan CMOS |
| Resolution | 2688 × 1520, 4 MP |
| Min. Illumination | Color: 0.005 Lux @(F1.3 , AGC ON), B/W: 0.001 Lux @(F1.3 , AGC ON) |
| Field of View | 56.6° ×33.7° (H × V)~1.8° ×1.0° (H × V) |
| Focal Length | 6-240 mm, 40x |
| Aperture (Range) | F1.3-F4.6 |
| Focus Mode | Auto/Semi-auto/Manual |
| Digital Zoom | ×2, ×4, ×8, ×16 |
| Shutter Speed | 1s to 1/30,000s |
| WDR | 120 dB |
| Optical Defog | Yes |
| **Image Effect** | |
| Picture in Picture | Display partial image of thermal channel on the full screen of optical channel |
| Target Coloration | Supported in white hot and black hot mode |
| **PTZ** | |
| Movement Range | Pan: 360° Continuous Rotate; Tilt: From -20° to + 90° (auto flip) |
| Pan Speed | Configurable, From 0.1°/s to 200°/s, Preset Speed: 240°/s |
| Tilt Speed | Configurable, From 0.1°/s to 105°/s, Preset Speed: 200°/s |
| Proportional Zoom | Yes |
| Presets | 300 in total, 273 are configurable. |
| Patrol Scan | 8; Up to 32 Presets Per Patrol |
| Pattern Scan | 4; More Than 10 Minutes Per Pattern |
| Power Off Memory | Yes |
| Park | Preset/Pattern Scan/Patrol Scan/Auto Scan/Tilt Scan/Random Scan/Frame Scan/Panorama Scan |
| PT Status | Turn On/Turn Off |
| Scheduled Task | Preset/Pattern Scan/Patrol Scan/Auto Scan/Tilt Scan/Random Scan/Frame Scan/Panorama Scan/Doom Reboot/Doom Adjust/Aux Output |
| **Illuminator** | |
| IR Distance | Up to 150m |

| | |
|---|---|
| IR Intensity and Angle | Automatically adjusted |
| **Smart Function** | |
| VCA | Support 4 VCA rule types (Line Crossing, Intrusion, Region Entrance, and Region Exiting), up to 10 scenes and 8 VCA rules for each scene |
| Temperature Measurement | Support 3 temperature measurement rule types, 273 presets as scene, 21 rules of each scene (10 points, 10 areas, and 1 line) |
| Temperature Range | -20 °C to 150 °C (-4 °F to 302 °F) |
| Temperature Accuracy | ± 8 °C (±14.4 °F) |
| Fire Detection | Dynamic fire detection, up to 10 fire points detectable. |
| **Video and Audio** | |
| Main Stream | Thermal channel<br>50fps(1920 × 1080, 1280 × 960, 1280 × 720 , 704×576 , 640×512 , 384×288)<br>Optical channel<br>50Hz:25fps(2688 × 1520 , 1920 × 1080, 1280 × 960, 1280 × 720)<br>60Hz:30fps(2688 × 1520 , 1920 × 1080, 1280 × 960, 1280 × 720) |
| Sub-stream | Thermal channel<br>50fps(704×576 , 640×512 , 384×288)<br>Optical channel<br>50Hz:25fps(704 × 576, 352 × 288)<br>60Hz:30fps(704 × 576, 352 × 288) |
| Video Compression | Main stream: H.265+/H.265/H.264+/ H.264<br>Sub-stream: H.265/H.264/MJPEG |
| Audio Compression | G .711u/G.711a/G.722.1/MP2L2/G.726/PCM |
| **Network** | |
| Protocols | IPv4/IPv6, HTTP, HTTPS, 802.1x, Qos, FTP, SMTP, UPnP, SNMP, DNS, DDNS, NTP, RTSP, RTCP, RTP, TCP, UDP, IGMP, ICMP, DHCP, PPPoE, SRTP |
| Network Storage | MicroSD/SDHC/SDXC card (256 G) local storage, and NAS (NFS, SMB/CIFS), auto network replenishment (ANR) |
| API | ISAPI, HIKVISION SDK, third-party management platform, ONVIF profile S,T,G) |
| Simultaneous Live View | Up to 20 channels |
| User/Host level | Up to 32 users, 3 levels: Administrator, Operator, User |
| Security | User authentication (ID and password), MAC address binding, HTTPS encryption, IEEE 802.1x access control, IP address filtering |
| Client | iVMS-4200, Hik-Connect |
| Web Browser | Live view (plug-in allowed) : Internet Explorer 11 Live view (plug-in free) : Chrome 57.0 +, Firefox 52.0 + Local service : Chrome 57.0+, Firefox 52.0 + |
| **Interface** | |
| Alarm Input | 7-ch inputs (0-5 VDC) |
| Alarm Output | 2-ch relay outputs, alarm response actions configurable |
| Alarm Action | Preset/Patrol Scan/Pattern Scan/SD Card Record/Relay Output/Smart capture/FTP upload/Email linkage |
| Audio Input | 1, 3.5 mm Mic in/Line in interface. Line input: 2 - 2.4 V [p-p], output impedance: 1 KΩ ± 10% |
| Audio Output | Linear Level; Impedance: 600 Ω |

| | |
|---|---|
| Communication Interface | 1, RJ45 10 M/100 M Self-adaptive Ethernet interface.<br>1, RS-485 interface |
| Analog Video Output | 1.0 V [p-p]/75 Ω |
| **General** | |
| Web Client Language | 32 languages<br>English, Russian, Estonian, Bulgarian, Hungarian, Greek, German, Italian, Czech, Slovak, French, Polish, Dutch, Portuguese, Spanish, Romanian, Danish, Swedish, Norwegian, Finnish, Croatian, Slovenian, Serbian, Turkish, Korean, Traditional Chinese, Thai, Vietnamese, Japanese, Latvian, Lithuanian, Portuguese (Brazil) |
| Power Supply | 24V AC ± 20%, 36V DC ± 20%, 48V DC ± 20%, Hi-PoE |
| Power Consumption | 65W Max |
| Work Temperature/Humidity | From -40°C to 65°C (-40°F to 149°F); Humidity: 95% or Less |
| Wiper | Yes |
| Protection Level | IP66 Standard; TVS 6000V Lightning Protection, Surge Protection and Voltage Transient Protection |
| Dimension | 220 mm × 410 mm × 198.6 mm (8.66" × 16.15" × 7.82") |
| Weight | Approx. 9kg (19.84 lb) |
| **Detection Range Table** | |
| VCA Range for Humans | 175 m |
| VCA Range for Vehicles | 525 m |
| **Approval** | |
| EMC | CE-EMC (EN 55032: 2015, EN 61000-3-2:2019, EN 61000-3-3: 2013+A1:2019, EN50130-4: 2011+A1: 2014);<br>RCM (AS/NZS CISPR 32: 2015);<br>IC (ICES-003: Issue 7) |
| Safety | CB: IEC 62368-1: 2014+A11;<br>CE-LVD: EN 62368-1: 2014/A11: 2017;<br>BIS: IS 13252 (Part 1): 2010/ IEC 60950-1: 2005 |
| Environment | CE-RoHS：2011/65/EU,<br>WEEE: 2012/19/EU,<br>Reach：Regulation(EC) No 1907/2006 |
| Protection | IP66: IEC 60529-2013 |
| Anti-Corrosion Protection | NEMA 4X (NEMA 250-2018) |

## ▪ Range Table

| VCA Range (Vehicles: 1.4 × 4.0 m) | VCA Range (Humans: 1.8 × 0.5 m) | Temperature Measurement (Object: 2 × 2 m) | Temperature Measurement (Object: 1 × 1 m) | Fire Detection (Object: 2 × 2 m) | Fire Detection (Object: 1 × 1 m) |
|---|---|---|---|---|---|
| 525 m | 175 m | 585 m | 295 m | 1470 m | 735 m |

## ▪ DORI

* The table is only for reference and the performance may vary from camera to camera.
Detection Range: In order to distinguish an object from the background, the image must be covered by 1.5 or more pixels.
Recognition Range: In order to classify the object (animal, human, vehicle, etc.), the image must have at least 6 pixels across its critical dimension.

Identification Range: In order to identify the object and describe it in details, the critical dimension must have be least 12 pixels across

| Detection Range (Vehicles: 1.4 × 4.0 m) | Detection Range (Humans: 1.8 × 0.5 m) | Recognition Range (Vehicles: 1.4 × 4.0 m) | Recognition Range (Humans: 1.8 × 0.5 m) | Identification Range (Vehicles: 1.4 × 4.0 m) | Identification Range (Humans: 1.8 × 0.5 m) |
|---|---|---|---|---|---|
| 2255 m | 735 m | 564 m | 184 m | 282 m | 92 m |

## ▪ Available Model

HM-TD4137-25/WY

## ▪ Dimension

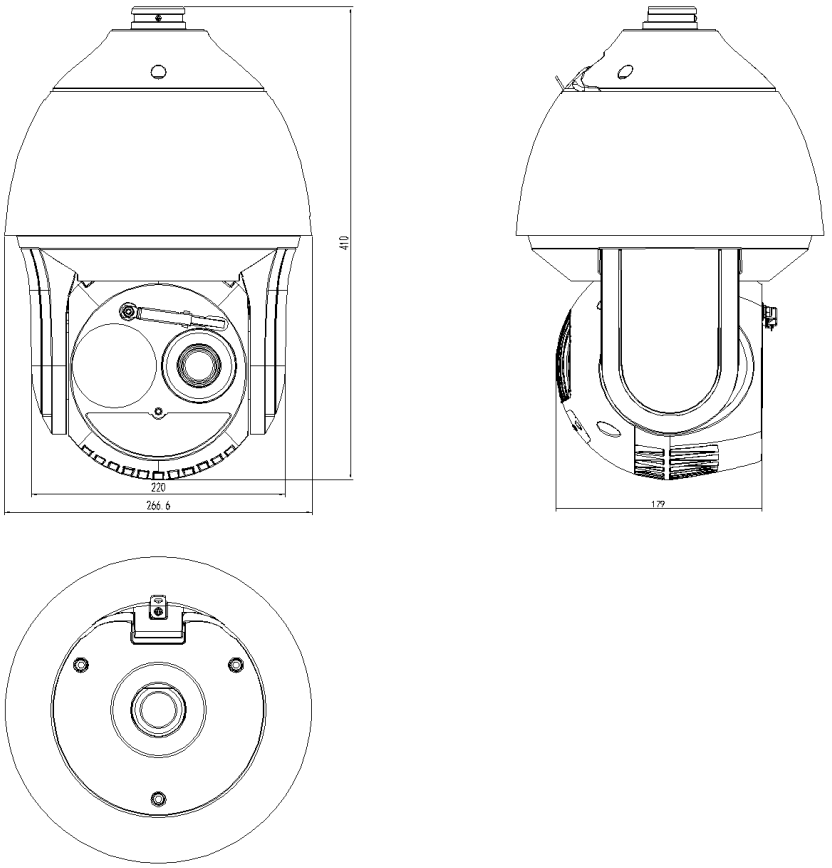


Unit:mm

## ▪ Accessory

### ▪ Optional

| DS-1604ZJ-box | DS-1602ZJ-Pole | DS-1603ZJ |
|---|---|---|
|  |  |  |

See Far, Go Further

www.hikvision.com
support@hikvision.com

© Hangzhou Hikvision Digital Technology Co., Ltd. Unless otherwise agreed, Hikvision makes no warranties, express or implied. We reserve the right to introduce modifications without notice.

HIKVISION®