DH-PFA121

Water-proof Junction Box



· Built of aluminum alloy.
· IP66 junction box.
· Contains cable outlets on its bottom and sides to make wiring more convenient.
· Matched with particular cameras, beautiful and elegant designed.



Series Overview

The Junction Box is beautifully designed and highly convenient. Cables can be organized in it and there are outlets at the bottom and side of the box, making it easy to install and use.

Scene

Ideal for mounting cameras, and works in temperatures ranging from –40 °C to +60 °C (–40 °F to +140 °F) and in environments with a relative humidity of less than 90%.

Technical Specification

Structure

Casing Material	Aluminum alloy
Product Dimensions	134.0 mm × 133.9 mm × 56.0 mm (5.28" × 5.27" × 2.20") (L × W × H)
Appearance Color	White
Net Weight	0.52 kg (1.15 lb)
Gross Weight	0.62 kg (1.37 lb)
Load Bearing	3.0 kg (6.61 lb)
Installation	Junction mount
Screw Thread Type	G3/4
Applicable Model	Please see "Camera Accessories Selection"
Packaging Dimensions	146.0 mm × 65.0 mm × 147.0 mm (5.75" × 2.56" × 5.79") (L × W × H)

Environment

Protection	IP66
Operating Temperature	–40 °C to +60 °C (–40 °F to +140 °F)
Operating Humidity	<90% (RH)
Storage Temperature	–40 °C to +60 °C (–40 °F to +140 °F)
Storage Humidity	10%–90% (RH)
Anti-corrosion Level	Basic Protection

Ordering Information

Type	Model	Description
Camera Mount	DH-PFA121	Water-proof Junction Box

Installation

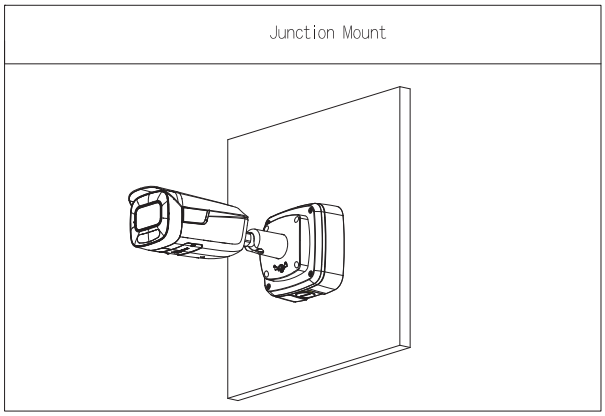

Dimensions (mm[inch])

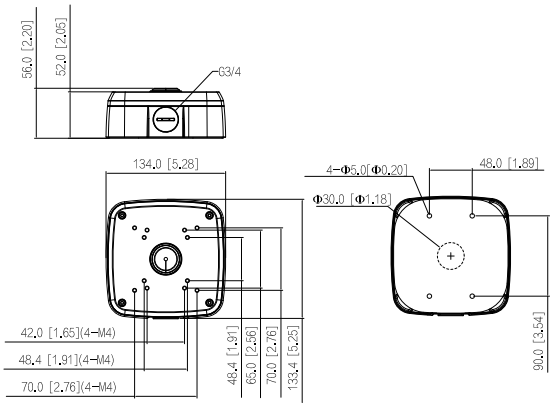

Package Information

- Water-proof junction box × 1
- M4×10 screw × 4
- S3.0 wrench × 1
- ST6×45 screw × 4
- Plastc expansion bolt × 4
- Flat gasket × 4

Rev 002.000 © 2025 Dahua. All rights reserved. Design and specifications are subject to change without notice.
The images, specifications and information mentioned in the document are only for reference, and might differ from the actual product.