HM-TD4167-25/WY
Thermal and Optical Bi-spectrum Network Speed Dome





HIKMICRO Thermal and Optical Bi-spectrum Network Speed Dome equipped with built-in GPU which sup ports intelligent perimeter protection algorithm, can realize high-precision VCA detection and real-time alarm. It is applied for perimeter protection and fire-prevention in critical infrastructures such as community, villa, construction site, factory, 4S stores, and so on . The pre-alarm system helps you discover unexpected events immediately and protects your property.

▪ Key Feature

- Perimeter protection function, based on intelligent algorithm: line crossing, intrusion, region entrance and exit
- Temperature exception alarm for fire prevention
- Fire detection algorithm
- 640 × 512 (the resolution of output image is 640 × 512) resolution 17 μm, VOx UFPA, NETD ≤ 40 mK (25°C, F# = 1.1)
- Image processing technology: Liner, histogram, and self-adaptive thermal AGC mode, DDE, 3D DNR
- High quality detector with 10 years guarantee
- Smart tracking: Panorama tracking, Event tracking and Multi-scene patrol tracking
- Smart tracking linkage: thermal view and optical view
- Thermal channel supports EIS, conflicted with intelligent function
- Smoke detection for fire prevention

▪ Specification

Thermal Module	
Image Sensor	VOx Uncooled Focal Plane Arrays
Resolution	640 × 512
Pixel Interval	17 μm
Response Waveband	8 μm to 14 μm
NETD	Less than 40 mK (@25°C, F# = 1.0)
Focal Length	25 mm
Focus Mode	Athermalized
IFOV	0.68 mrad
Aperture	F1.0
Field of View	24.5° × 19.7° (H × V)
Min. Focusing Distance	13 m
Digital Zoom	×2, ×4, ×8
Optical Module	
Image Sensor	1/1.8" Progressive Scan CMOS
Resolution	2688 × 1520, 4 MP
Min. Illumination	Color: 0.005 Lux @(F1.3, AGC ON), B/W: 0.001 Lux @(F1.3, AGC ON)
Field of View	56.6° × 33.7° (H × V)~1.8° × 1.0° (H × V)
Focal Length	6~240 mm, 40x
Aperture (Range)	F1.3~F4.6
Focus Mode	Auto/Semi-auto/Manual
Digital Zoom	×2, ×4, ×8, ×16
Shutter Speed	1 s to 1/30,000 s
WDR	120 dB
Optical Defog	Yes
Image Effect	
Picture in Picture	Display partial image of thermal channel on the full screen of optical channel
Target Coloration	Supported in white hot and black hot mode
PTZ	
Movement Range	Pan: 360° Continuous Rotate; Tilt: From -20° to +90° (auto flip)
Pan Speed	Configurable, From 0.1°/s to 200°/s, Preset Speed: 240°/s
Tilt Speed	Configurable, From 0.1°/s to 105°/s, Preset Speed: 200°/s
Proportional Zoom	Yes
Presets	300 in total, 273 are configurable.
Patrol Scan	8; Up to 32 Presets Per Patrol
Pattern Scan	4; More Than 10 Minutes Per Pattern
Power Off Memory	Yes
Park	Preset/Pattern Scan/Patrol Scan/Auto Scan/Tilt Scan/Random Scan/Frame Scan/Panorama Scan
PT Status	Turn On/Turn Off

Scheduled Task	Preset/Pattern Scan/Patrol Scan/Auto Scan/Tilt Scan/Random Scan/Frame Scan/Panorama Scan/Doom Reboot/Doom Adjust/Aux Output
Illuminator	
IR Distance	Up to 150 m
IR Intensity and Angle	Automatically adjusted
Smart Function	
VCA	Support 4 VCA rule types (Line Crossing, Intrusion, Region Entrance, and Region Exiting), up to 10 scenes and 8 VCA rules for each scene
Temperature Measurement	Support 3 temperature measurement rule types, 273 presets as scene, 21 rules of each scene (10 points, 10 areas, and 1 line)
Temperature Range	-20°C to 150°C (-4°F to 302°F)
Temperature Accuracy	±8°C (±14.4°F)
Fire Detection	Dynamic fire detection, up to 10 fire points detectable.
Video and Audio	
Main Stream	Thermal channel 50 fps (1920 × 1080, 1280 × 960, 1280 × 720, 704 × 576, 640 × 512, 384 × 288) Optical channel 50 Hz: 25 fps (2688 × 1520, 1920 × 1080, 1280 × 960, 1280 × 720) 60 Hz: 30 fps (2688 × 1520, 1920 × 1080, 1280 × 960, 1280 × 720)
Sub-stream	Thermal channel 50 fps (704 × 576, 640 × 512, 384 × 288) Optical channel 50 Hz: 25 fps (704 × 576, 352 × 288) 60 Hz: 30 fps (704 × 576, 352 × 288)
Video Compression	Main stream: H.265+/H.265/H.264+/ H.264 Sub-stream: H.265/H.264/MJPEG
Audio Compression	G .711u/G.711a/G.722.1/MP2L2/G.726/PCM
Network	
Protocols	IPv4/IPv6, HTTP, HTTPS, 802.1x, Qos, FTP, SMTP, UPnP, SNMP, DNS, DDNS, NTP, RTSP, RTCP, RTP, TCP, UDP, IGMP, ICMP, DHCP, PPPoE
Network Storage	MicroSD/SDHC/SDXC card (256 G) local storage, and NAS (NFS, SMB/CIFS), auto network replenishment (ANR)
API	ISAPI, HIKVISION SDK, third-party management platform, ONVIF profile S,T,G)
Simultaneous Live View	Up to 20 channels
User/Host level	Up to 32 users, 3 levels: Administrator, Operator, User
Security	User authentication (ID and password), MAC address binding, HTTPS encryption, IEEE 802.1x access control, IP address filtering
Client	iVMS-4200, Hik-Connect
Web Browser	Live view (plug-in allowed) : Internet Explorer 11 Live view (plug-in free) : Chrome 57.0 +, Firefox 52.0 + Local service : Chrome 57.0+, Firefox 52.0 +
Interface	
Alarm Input	7-ch inputs (0~5 VDC)
Alarm Output	2-ch relay outputs, alarm response actions configurable

Alarm Action	Preset/Patrol Scan/Pattern Scan/SD Card Record/Relay Output/Smart capture/FTP upload/Email linkage
Audio Input	1, 3.5 mm Mic in/Line in interface. Line input: 2~2.4 V [p-p], output impedance: 1 kΩ ±10%
Audio Output	Linear Level; Impedance: 600 Ω
Communication Interface	1, RJ45 10 M/100 M Self-adaptive Ethernet interface. 1, RS-485 interface
Analog Video Output	1.0 V [p-p]/75 Ω
General	
Web Client Language	32 languages English, Russian, Estonian, Bulgarian, Hungarian, Greek, German, Italian, Czech, Slovak, French, Polish, Dutch, Portuguese, Spanish, Romanian, Danish, Swedish, Norwegian, Finnish, Croatian, Slovenian, Serbian, Turkish, Korean, Traditional Chinese, Thai, Vietnamese, Japanese, Latvian, Lithuanian, Portuguese (Brazil)
Power Supply	24 V AC ±20%, 36 V DC ±20%, 48 V DC ±20%
Power Consumption	65 W Max
Work Temperature/Humidity	From -40°C to 65°C (-40°F to 149°F); Humidity: 95% or Less
Wiper	Yes
Protection Level	IP66 Standard; TVS 6000 V Lightning Protection, Surge Protection and Voltage Transient Protection
Dimension	220 mm × 410 mm × 198.6 mm (8.66" × 16.15" × 7.82")
Weight	Approx. 9 kg (19.84 lb)

▪ Range Table

VCA Range (Vehicles: 1.4 × 4.0 m)	VCA Range (Humans: 1.8 × 0.5 m)	Temperature Measurement (Object: 2 × 2 m)	Temperature Measurement (Object: 1 × 1 m)	Fire Detection (Object: 2 × 2 m)	Fire Detection (Object: 1 × 1 m)
525 m	175 m	585 m	295 m	1470 m	735 m

▪ DORI

* The table is only for reference and the performance may vary from camera to camera.
Detection Range: In order to distinguish an object from the background, the image must be covered by 1.5 or more pixels.
Recognition Range: In order to classify the object (animal, human, vehicle, etc.), the image must have at least 6 pixels across its critical dimension.
Identification Range: In order to identify the object and describe it in details, the critical dimension must have be least 12 pixels across

Detection Range (Vehicles: 1.4 × 4.0 m)	Detection Range (Humans: 1.8 × 0.5 m)	Recognition Range (Vehicles: 1.4 × 4.0 m)	Recognition Range (Humans: 1.8 × 0.5 m)	Identification Range (Vehicles: 1.4 × 4.0 m)	Identification Range (Humans: 1.8 × 0.5 m)
2255 m	735 m	564 m	184 m	282 m	92 m

▪ Available Model

HM-TD4167-25/WY

▪Dimension

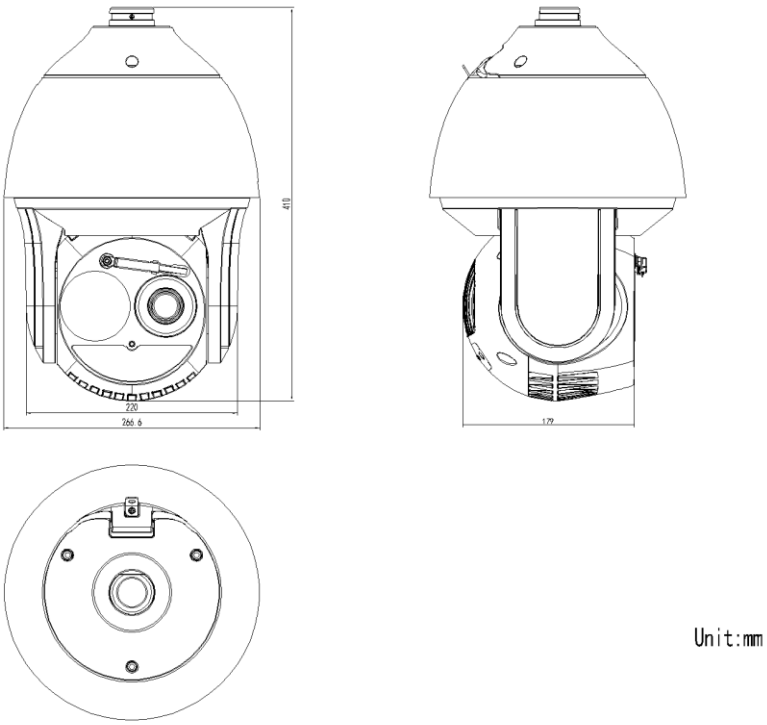

Unit:mm

▪ Accessory

▪Optional

DS-1603ZJ Wall mount	DS-1604ZJ-box Wall mount	DS-1602ZJ-Pole Vertical pole mount
		

COMPLIANCE NOTICE: The thermal series products might be subject to export controls in various countries or regions, including without limitation, the United States, European Union, United Kingdom and/or other member countries of the Wassenaar Arrangement. Please consult your professional legal or compliance expert or local government authorities for any necessary export license requirements if you intend to transfer, export, re-export the thermal series products between different countries.

Building A1, No. 299, Qiushi Road, Tonglu Economic Development Zone, Tonglu County, Hangzhou, Zhejiang

© Hangzhou HikMicro Sensing Technology Co., Ltd. 2023 | Data subject to change without notice!