DS-3WF03C-5AC/O(海外标配)V2
Wireless Bridge



The wireless bridge can be applied in industries, such as wireless video security, railway, transportation, power and other industries, wireless video/data transmission, wireless coverage, carrier wireless backbone network construction, Wi-Fi wireless coverage, rural information construction, and wireless network coverage. The long-distance transmission of the device can guarantee multi-channel HD video transmission.

- All gigabit LAN ports
- TDMA supported
- Quick match through DIP switch
- Visualized topology management
- Up to 15 km wireless transmission distance

▪ Specification

General	
Product Dimensions (W × H × D)	92 mm × 187 mm × 58 mm (3.62'' × 7.36'' × 2.28'')
Package Dimensions (W × H × D)	132 mm × 228 mm × 91 mm (5.19" × 8.97" × 3.58")
Net Weight	0.307 kg (0.677 lb)
Gross Weight	0.807 kg (1.779 lb)
Packing List	Wireless Bridge × 1,Power Adapter (12 VDC, 1 A) × 1,Binding Tape × 2,Quick Start Guide ×1
Packing Method	Single unit packing
Working Temperature	-30 °C to 70 °C (-22 °F to 158 °F)
Working Humidity	5% to 95% (no condensation)
Storage Temperature	-40 °C to 85 °C (-40 °F to 185 °F)
Storage Humidity	5% to 95% (no condensation)
Installation Mode	Pole Mounting
Ingress Protection	IP55
Power Consumption	3 W for typical (1-ch 2MP IPC), Max. 7.5 W
Wireless Parameter	
Wireless Standard	IEEE 802.11/a/n/ac
Max. Transmission Rate of Air Interface	≤ 867 Mbps
Working Frequency Band	5150 MHz ~ 5250 MHz,5250 MHz~ 5350 MHz,5470 MHz~ 5725 MHz,5725 MHz~ 5850 MHz
Antenna Gain	12 dBi
Antenna Angle	(H) Beamwidth [3 dB] 35° (V) Beamwidth [3 dB] 35°
Transmitting Power	30 dBm @11ac MCS0 (Note: Transmitting power may vary with local regulations.)
Receiving Sensitivity	-86±2dBm@AC80-MCS0
Throughput Rate	PTP: ,230 Mbps/1 KM(AC80),200 Mbps/5 KM(AC80),20 Mbps/15 KM(AC80),PTMP(1 to 8): ,80 Mbps/5 KM(AC80)
Hardware Parameter	
Network Interface	2 × 1000 Mbps RJ45 ports
LED Indicator	Power indicator,LAN indicator,Signal intensity indicator
Reset	Hardware resetting button
Power Supply	12-24 VDC/1 A Passive PoE
Software Function	
Application Function	TDMA,DFS,TPC,IFM,IPM
Channel Width	20/40/80 MHz
Channel Selection	Auto/manual selection
Network Protocol	NTP (network time synchronization),SADP (auto search for IP address),HTTPS (web management),SSH (debugging)
Security Mode	WPA2-PSK
Security Mechanism	Wireless network name hidden
Management Method	Web,HCP
Upgrade	Web,iVMS-4200
System Log	Syslog,Control center information

HPP	Support one-click activation and remote management via Hik-Partner Pro. Functions supported: 1. Reboot device 2. Restore device 3. Display the topology information 4. Display the connection status between AP and CPEs, including signal intensity, backgroud noise, sending & receiving rate 5. Configure wireless settings, including working mode, SSID, password, channel, channel bandwidth, transmitting power 6. Bridge alignment 7. Spectrum scanning
Approval	
EMC	CE-EMC (EN 55032:2015+A11: 2020, EN IEC 61000-3-2:2019, EN 61000-3-3:2013+A1: 2019, EN 50130-4:2011+A1: 2014, EN 55035:2017+A11: 2020),IC (ICES-003: Issue 7:2020),RCM (AS/NZS CISPR 32: 2015)
Safety	UL (UL 60950-1),CB (AMD1:2009, AMD2:2013, IEC 62368-1:2014 (Second Edition), CE-LVD (EN 62368-1: 2014+A11: 2017)
Chemistry	CE-RoHS (2011/65/EU),WEEE (2012/19/EU),Reach (Regulation (EC) No.1907/2006)
Radio	EN 301 893,EN 300 440,EN 62311,EN 301 489-3,EN 301 489-17,FCC Part 15.247

▪ Typical Application

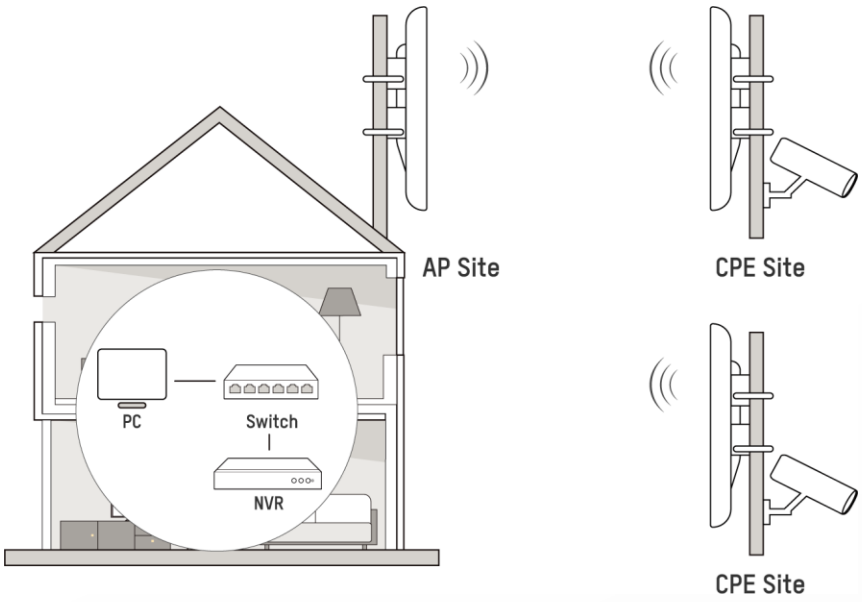

▪ Physical Interface

Interface/Button	Description
CPE/AP DIP Switch	Switch up or down to set the device as AP or CPE.
SSID	4-character SSID to realize 16 kinds of matching ways by switching up or down. The CPE will connect to the AP when its SSID matches the AP's.
PoE/LAN1	The 10/100/1000 Mbps adaptive RJ45 port, also can be used as a PoE port.
LAN2	The 10/100/1000 Mbps adaptive RJ45 port.
Reset	Long press for 4 sec to restore to factory settings.

DC 12V	If the PoE injector is not used for powering on the device, you can use the attached power adapter to connect the device to socket.

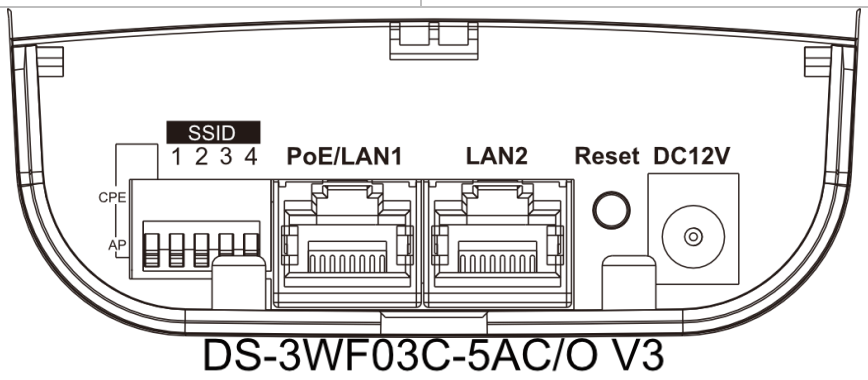

DS-3WF03C-5AC/O V3

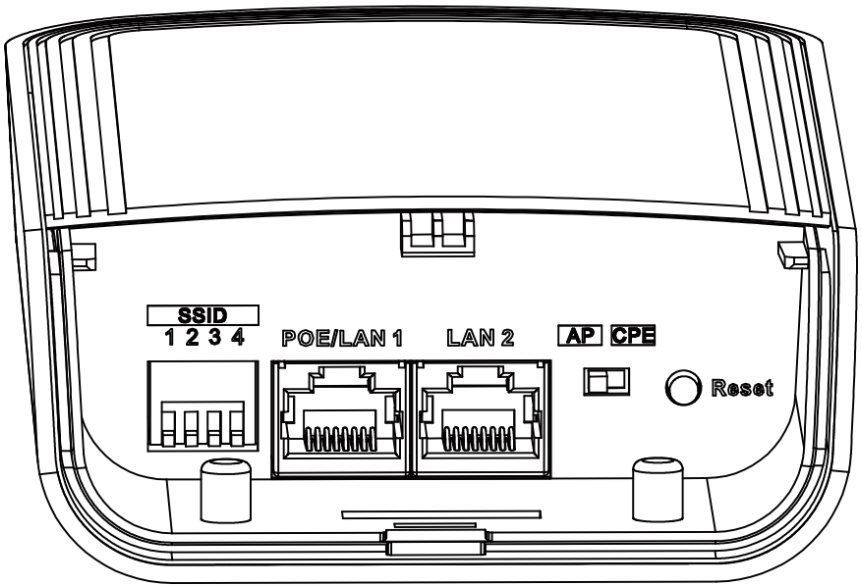

▪ Available Model

DS-3WF03C-5AC/OV2

▪ Dimension

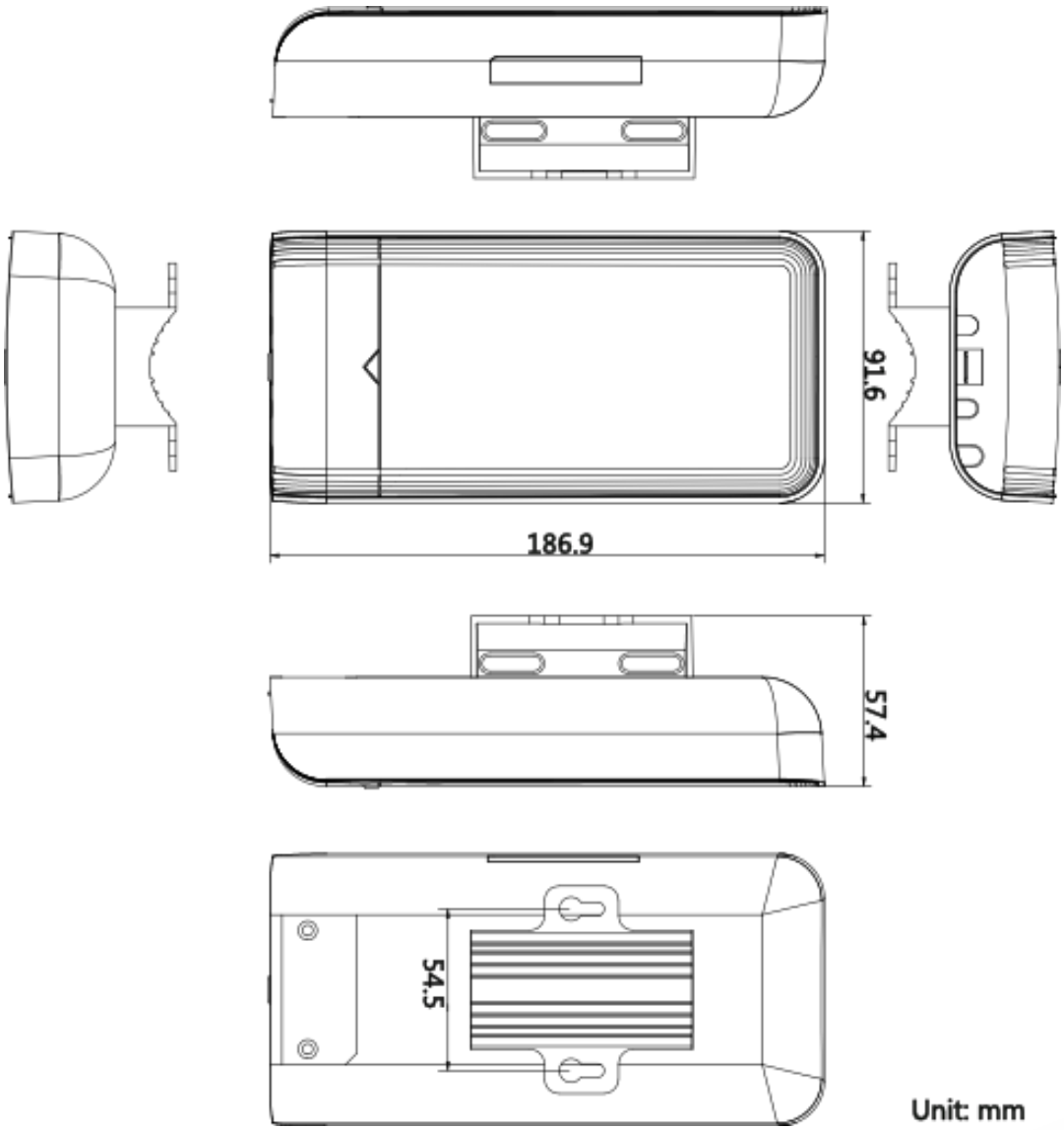

Unit: mm

DS-3WF03C-5AC/O V3

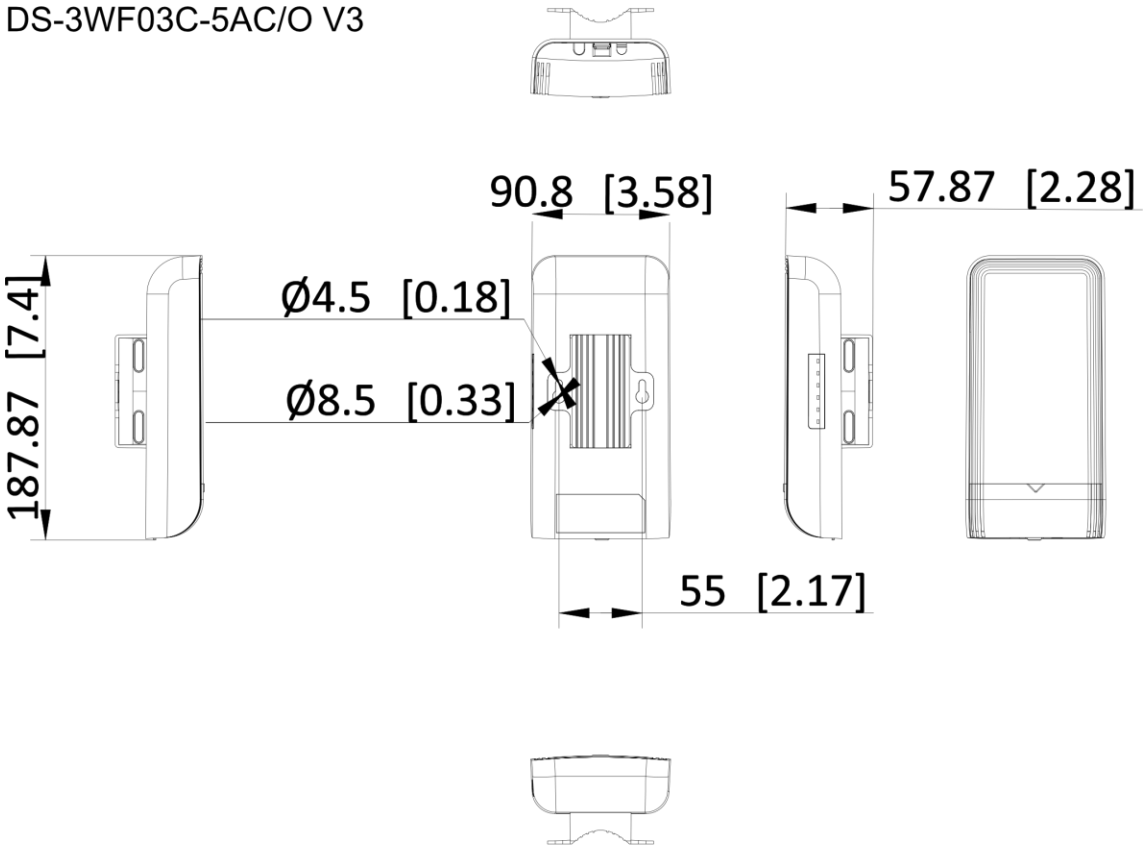

Unit: mm [inch]

See Far, Go Further

www.hikvision.com
support@hikvision.com

© Hangzhou Hikvision Digital Technology Co., Ltd. Unless otherwise agreed, Hikvision makes no warranties, express or implied. We reserve the right to introduce modifications without notice.

HIKVISION®